# Voice controlled pick and place robot with camera vision

[1]Mr.G.Shravan Kumar, [2]Mr.Ch.Srinu, [3]Ms.Chandana
[1]Mr.G.Sravan Kumar , Assistant professor, ECE Department, MLR Institute of Technology
[2]MR.Ch.Srinu, Assistant professor, ECE Department , MLR Institute of Technology
[3]Ms.Chandana, Under graduate, MLR Institute of Technology
Shravan.mlr@gmail.com,Sreenu471.ece@gmail.com

***Abstract**: The project aims in designing a Robot arm which is operated through the speech commands given by the user wirelessly and also which is capable of Picking and Placing of many objects. This system makes use of Zigbee technology for wireless transmission. The advent of new high-speed technology and introduction of speech recognition techniques provided a realistic opportunity for new robot controls and realization of new methods of control theory.*

*This technical improvement together with the need for high performance robots created faster, more accurate and more intelligent robots using new robots control devices, new drivers and advanced control algorithms. In addition to it we are interfacing camera to the robot so that the object which to be picked can be seen . We also interfacing voice control recognition module (v3) so that the robot can be controlled by voice*

## INTRODUCTION:

Pick and place robots are used in a wide variety of material transfer applications. Basically, the machine takes a product from one spot in the manufacturing process and places into another. A good example is a robot picking items off a conveyor belt and placing then into packaging boxes.

The typical pick and place application requires high amounts of repetitive motion. Robots can eliminate human operation of hazardous tasks such as chemical spraying or heavy lifting. Pick and place robots have high return on investment when consistent shaped parts or containers are handled. Unlike human operators, robots also have the ability to work for an extended time.

## Voice Recognition Module V3 (Speak to Control)

ELECHOUSE Voice Recognition Module is a compact and easy-control speaking recognition board. This product is a speaker-dependent voice recognition module. It supports up to 80 voice commands in all. Max 7 voice commands could work at the same time. Any sound could be trained as command. Users need to train the module first before let it recognizing any voice command. This board has 2 controlling ways: Serial Port (full function), General Input Pins (part of function). General Output Pins on the board could generate several kinds of waves while corresponding voice command was recognized.

On V3, voice commands are stored in one large group like a library. Any 7 voice commands in the library could be imported into recognizer. It means 7 commands are effective at the same time.

Voltage: 4.5-5.5V,Current: <40Ma,Digital Interface: 5V TTL level for UART interface and GPIO, Analog Interface: 3.5mm mono-channel microphone connector + microphone pin interfaceSize: 31mm x 50mm Support maximum 80 voice commands, with each voice 1500ms (one or two words speaking). Maximum 7 voice commands effective at same time. Arduino library is supplied. Easy Control: UART/GPIOUser-control General Pin Output

Voice Recognition Module V3. Recognizer container where acting voice commands (max 7) were loaded. It is core part of voice recognition module. For example, it works like “playing balls”. You have 80 players in your team. But you could not let them all play on the court together. The rule only allows 7 players playing on the court. Here the Recognizer is the list which contains names of

players working on the court.Recognizer index -- max 7 voice commands could be supported in the recognizer. The recognizer has 7 regions for each voice command. One index corresponds to one region: 0~6. Train -- the process of recording your voice commands. Load -- copy trained voice to recognizer. Voice Command Record -- the trained voice command store in flash, number from 0 to 79. Signature -- text comment for record. Group -- help to manage records, each group 7 records. System group and user group are supported.

## Zigbee

The field of wireless communications has been in existence since the first humans learned to communicate. In early days of civilization humans would transmit notices of important events, such as enemy invasions or royal births, through the sounding of horns or the lighting of fires. While simple messages could be effectively transmitted in this manner, in order to communicate over long distances the manpower expense was great, since watchtowers had to be built within sight of each other and continually manned, and the number of messages was small. It was not until the 1800's that wireless communications became what we know it as today. Now we are able to use radio frequencies to communicate information over long distances (think of the Cassini mission to Saturn), we can send voice or video at rates of more than hundreds of megabits per second, and the associated technology has become so inexpensive that many people are able to afford a mobile phone in order to be in constant contact with others.

ZigBee is an established set of specifications for wireless personal area networking (WPAN), i.e. digital radio connections between computers and related devices. WPAN Low Rate or ZigBee provides specifications for devices that have low data rates, consume very low power and are thus characterized by long battery life. ZigBee makes possible completely networked homes where all devices are able to communicate and be controlled by a single unit. The ZigBee Alliance, the standards body which defines ZigBee, also publishes application profiles that allow multiple OEM vendors to create interoperable products.


**Figure1. zigbee module**

The relationship between IEEE 802.15.4 and ZigBee is similar to that between IEEE 802.11 and the Wi-Fi Alliance. For non-commercial purposes, the ZigBee specification is available free to the general public. An entry level membership in the ZigBee Alliance, called Adopter, costs US$ 3500 annually and provides access to the as-yet unpublished specifications and permission to create products for market using the specifications. ZigBee is one of the global standards of communication protocol formulated by the relevant task force under the IEEE 802.15 working group. The fourth in the series, WPAN Low Rate/ZigBee is the newest and provides specifications for devices that have low data rates, consume very low power and are thus characterized by long battery life. Other standards like Bluetooth and IrDA address high data rate applications such as voice, video and LAN communications. ZigBee devices are actively limited to a throughrate of 250Kbps, compared to Bluetooth's much larger pipeline of 1Mbps, operating on the 2.4 GHz ISM band, which is available throughout most of the world.In the consumer market ZigBee is being explored for everything from linking low-power household devices such as smoke alarms to a central housing control unit, to centralized light controls.

*Table: Frequency bands and data rates*

| PHY | Frequency Band | Channel Numbering | Spreading Parameters | | Data Parameters | | |
|---|---|---|---|---|---|---|---|
| | | | Chip Rate | Modulation | Bit Rate | Symbol Rate | Modulation |
| 868 to 915 MHz | 868 to 870 MHz | 0 | 300 k chip/s | BPSK | 20 kb/s | 20 k baud | BPSK |
| | 902 to 928 MHz | 1 to 10 | 600 k chip/s | BPSK | 40 kb/s | 40 k baud | BPSK |
| 2.4 GHz | 2.4 to 2.4835 GHz | 11 to 26 | 2.0 M chip/s | O-QPSK | 250 kb/s | 62.5 k baud | 16-ary Orthogonal |

**Table.Comparison of wireless n/w**

The media access control (MAC) layer was designed to allow multiple topologies without complexity. The power management operation doesn't require multiple modes of operation. The MAC allows a reduced functionality device (RFD) that needn't have flash nor large amounts of ROM or RAM. The MAC was designed to handle large numbers of devices without requiring them to be "parked".

Zigbee promises to put wireless sensors in everything from factory automation systems to home security systems to consumer electronics. Zigbee is a new standard that still needs to pass through the circles or rigorous technology critics and establish its own place in the industry. The next zigbee challenge will be devising the proposed extension to the 802.15.4 standard,'4a' which could be based on ultra-wideband (UWB).

**DC MOTOR**

An electric motor is an electromechanical device that converts electrical energy into mechanical energy. Most electric motors operate through the interaction of magnetic fields and current-carrying conductors to generate force. The reverse process, producing electrical energy from mechanical energy, is done by generators such as an alternator or a dynamo; some electric motors can also be used as generators, for example, a traction motor on a vehicle may perform both tasks. Electric motors and generators are commonly referred to as electric machines.

Electric motors are found in applications as diverse as industrial fans, blowers and pumps, machine tools, household appliances, power tools, and disk drives.

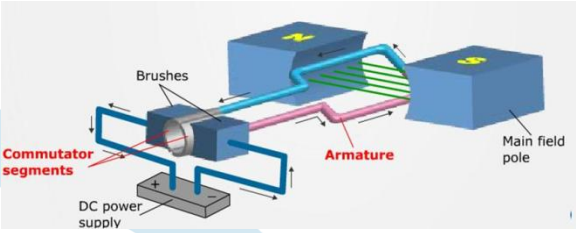


**Figure2. Working of DC motor**

The brushes are conventionally located in brush boxes and utilize a U-shaped spring which biases the brush into contact with the commentator. Permanent magnet brushless dc motors are widely used in a variety of applications due to their simplicity of design, high efficiency, and low noise. These motors operate by electronic commutation of stator windings rather than the conventional mechanical commutation accomplished by the pressing engagement of brushes against a rotating commentator.

A brushless DC motor basically consists of a shaft, a rotor assembly equipped with one or more permanent magnets arranged on the shaft, and a stator assembly which incorporates a stator component and phase windings. Rotating magnetic fields are formed by the currents applied to the coils.

The rotator is formed of at least one permanent magnet surrounded by the stator, wherein the rotator rotates within the stator. Two bearings are mounted at an axial distance to each other on the shaft to support the rotor assembly and stator assembly relative to each other. To achieve electronic commutation, brushless dc motor designs usually include an electronic controller for controlling the excitation of the stator windings.

**ATMEGA16:**

The ATmega16 is a low-power CMOS 8-bit microcontroller based on the AVR enhanced RISC architecture. By executing powerful instructions in a single clock cycle, the ATmega16 achieves throughputs approaching 1 MIPS per MHz allowing the system designer to optimize power consumption versus processing speed.

Register is a data holding place and very fast memory it's a part of CPU. Registers serves as connection between a CPU and a Peripheral device .CPU doesn't give instruction directly to peripherals or output devices.CPU doesn't give instruction directly to peripherals or output devices. CPU give output by writing registers CPU take input by reading registers

The AVR core combines a rich instruction set with 32 general purpose working registers. All the 32 registers are directly connected to the Arithmetic Logic Unit (ALU), allowing two independent registers to be accessed in one single instruction executed in one clock cycle. The resulting architecture is more code efficient while achieving throughputs up to ten times faster than conventional CISC microcontrollers. The ATmega16 provides the following features: 16 Kbytes of In-System Programmable Flash Program memory with Read-While-Write capabilities, 512 bytes EEPROM, 1 Kbyte SRAM, 32 general purpose I/O lines, 32 general purpose working registers, a JTAG interface for Boundaryscan, On-chip Debugging support and programming, three flexible Timer/Counters with compare modes, Internal and External Interrupts, a serial programmable USART, a byte oriented Two-wire Serial Interface, an 8-channel, 10-bit ADC with optional differential input stage with programmable gain (TQFP package only), a programmable Watchdog Timer with Internal Oscillator, an SPI serial port, and six software selectable power saving modes. The Idle mode stops the CPU while allowing the USART, Two-wire interface, A/D Converter, SRAM, Timer/Counters, SPI port, and interrupt system to continue functioning. The Power-down mode saves the register contents but freezes the Oscillator, disabling all other chip functions until the next External Interrupt or Hardware Reset.

In Power-save mode, the Asynchronous Timer continues to run, allowing the user to maintain a timer base while the rest of the device is sleeping. The ADC Noise Reduction mode stops the CPU and all I/O modules except Asynchronous Timer and ADC, to minimize switching noise during ADC conversions. In Standby mode, the crystal/resonator Oscillator is running while the rest of the device is sleeping. This allows very fast start-up combined with low-power consumption. In Extended Standby mode, both the main Oscillator and the Asynchronous Timer continue to run. The device is manufactured using Atmel's high density nonvolatile memory technology. The Onchip ISP Flash allows the program memory to be reprogrammed in-system through an SPI serial interface, by a conventional nonvolatile memory programmer, or by an On-chip Boot program running on the AVR core. The boot program can use any interface to download the application program in the Application Flash memory. Software in the Boot Flash section will continue to run while the Application Flash section is updated, providing true Read-While-Write operation.

## HARDWARE IMPLEMENTATION :

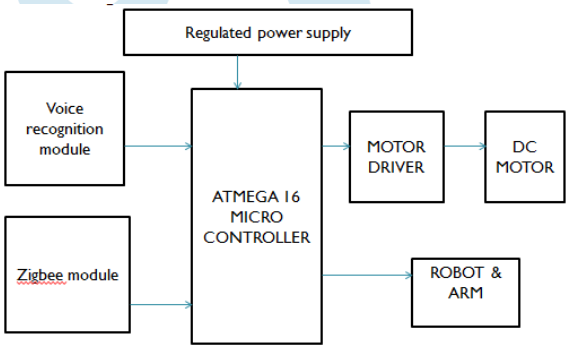


**Figure4. Block diagram of the system**

Regulated power supply is given to the circuit in order to make circuit on. Program will be written in the code vision AVR . To the micro controller program is being dumped . According to the instructions given in the program motors which are placed at the bottom will rotate. Wheels will be rotating in forward ,backward,left,right,radial left,radial right,differential left,differential right.

Motor is connected to the micro controller by means of motor driver.to the micro controller servo motors are also connected for the movement of gripper and camera rotation.

Zigbee wireless module is being connected so as to control the project wireless. Voice module v3 is also connected to the micro controller . Based on the commands we give to the controller the movement of the wheels,gripper and camera will takes place.

Zigbee transmitter and receiver will there through which wireless transmission takesplace.

## RESULT ANALYSIS:

**Figure3. Hardware design of pick and place robot**

Voice based control pick and place robot is being obtained .according to the voice commands we give robot will move in different directions. Movement of gripper and camera is being done.

## CONCLUSION

Integrating features of all the hardware components usedhave been developed in it. Presence of every module has been reasoned out and placed carefully, thus contributing to the best working of the unit. Secondly, using highly advanced IC's with the help of growing technology, the project has been successfully implemented. Thus the project has been successfully designed and tested. ―Speech recognition controlled wireless pick and place robot‖ is intended to control the direction of a Robot through speech commands using speech recognition module. Microcontroller with the user has a speech recognition module interfaced to it and also it is interfaced with Zigbee module. Whenever the user pronounces a speech command, the relevant information to that command is fed to Microcontroller which transmits it through Zigbee module which will be received by the system at Robot. This data is fed to the Microcontroller with robot and is processed by controller and acts accordingly on robot and arm DC motors. DC motors are interfaced through a motor driver (L2938) which controls the direction of Robot. The main drawback of this system is it usesZigbee communication mechanism which supports only for limited distance and also it doesn't give the exact speed of the motor.

## REFERENCES


- Currie, Adam (1999). "The History of Robotics". Retrieved 10 September 2007.
- RK Mittal and IJ Nagarath "robotics and control"BITSPilani, 2003
- A.K. Jain, R. Bolle and S. Pankanti biometrics personal identification in networked security A. K. Jain, R. Bolle and S. Pankanti, Eds.: Kluwer Academic Publishers, 1999
- J.N.K Liu, M. Wang and B. Feng, "iBotguard: an Internet based intelligent robot security system using Face recognition against intruder," IEEE Transactions on system man and Cybernetics part application and review vol.35 pp.97-105, 2005.