Detection And Warning System for Heart Attacks using IoT

[1]Femi Antony, [2]Ann Mary Joseph, [3]Jency K Davis, [4]Diffeena Stenislawoos

Research Scholars
Department of Computer Science
Sahrdaya College of Engineering and Technology Kodakara, India

***Abstract*— A progressive advancement in IoT and wireless technology are the major contributors to the realization of continuous remote heart monitoring system .Wireless Body Area Network is part of this technology due to the deployment of multiple sensors such as Electrocardiogram (ECG), temperature and blood pressure to collect vital body signals for and diagnosis. Among the benefits offered by this technology include remote monitoring of patient's health status and early detection of abnormalities in the collected signals by using past records of the patient. Once detected, several preventive measurements can be taken. The only reason behind heart attack death is the lack of medical care at instant. This paper presents an android based portable ECG monitor. The patient will be given a small device which senses the ECG data. This small device send the sensed data to the patient's physician Android mobile via wifi module using IoT technology combined with cloud computing which runs a heart attack detection algorithm with levels of temperature and blood pressure values. If in case any abnormalities are found the patient will be notified. An ECG report will be send to the patient's doctor through any social media apps or incase of no network connectivity, sends an sms that contain exact patient's location(GPS) so that help can be given at the earliest even if the patient is travelling. The goal is to provide early heart attack detection so that the patient will be given medical attention within the first few important hours, therefore greatly improving patient's chances of survival. The system resolves some challenges in the wireless network such as delay, packet loss and throughput due to network congestion when transmitting and receiving a bulk of multiple data. Generally, the presence of these problems in transmitting vital body signals may result in incorrect medical diagnosing which can increase mortality rate and cause severe impact to the overall system's performance. Thus, a suitable design of congestion control mechanism has been implemented by the IoT-cloud computing technology.**

***IndexTerms*— real-time monitoring, ECG, IoT, cloud computing, portable ECG.**

I. INTRODUCTION

Cardiovascular diseases (CVDs) have become one of the leading causes of death in both developing and developed countries over the world. Cardiovascular diseases are a group of disorders of the heart and blood vessels. Over 80% of the world's deaths from CVDs occur in low- and middle-income countries [1]. People in low- and middle-income countries are more exposed to risk factors such as tobacco, leading to cardiac arrests. At the same time they often do not have the benefit of prevention programmes compared to people in high-income countries. A traditional monitoring system usually uses a direct-wire Connection between the subject and the instrument; the subject is therefore confined to the monitoring instrument. . Computer programs and hardware are very less prone to mistakes so it can be used for this major disease detection to avoid miscommunication. So by using electronic healthcare services we can prevent serious complications and damage of heart by early detection of in order to alert doctors in real time, especially for patients with high risk.

Hence a wearable wireless sensor networks are implemented which detaches the sensing unit from the processing and transmission part. hence the patient with wearable sensors can be monitored in a real time analysis. A conventional ECG system is usually only used for collecting data, while the data processing and diagnosis are done offline by the clinical representatives. In contrast, the on-body sensor node in the wireless proposed system can detect early abnormalities even when the subject is unaware or unconscious. For aging people with cardiac diseases, emergencies often occur when the patients are sleeping or not concious. Hence it is important that the medical disorders can be detected early. Otherwise people often mistake cardiac arrests for chest pain. Finally, using the telecommunication infrastructure, signals can be directly delivered to the clinics, where doctors can remotely analyze real-time status of the subject, and make correct diagnosis timely [2].

II. RELATED WORKS

[3] . The recommended arm-band ECG is prepared with a variety of features. Considering mobile monitoring, it is equipped with an Android mobile application and Bluetooth low energy (BLE) data transmission. Timely heart rate detection was put into the Android application software, which was tested in various scenarios, from resting in a chair, standing up, and walking to exercising or running in place. The results show that this monitoring can function in all of these scenarios.

[4] The primary purpose of [4] is to build a wireless sensor network system that can continuously screen and find cardiovascular disease experienced in patients at remote areas. A wearable wi-fi sensor system (WWSS) is made to continuously capture and transmit the ECG signal to the patient's mobile phone. The speediest notification will be given to doctors, relatives, and hostipal wards, using the proposed data processing algorithm implemented in the patients cellphone.

[5] A proposal to solve this problem is the execution of a wireless network based on Bluetooth (BT) for recording, monitoring and analysis of electrocardiographic signs (ECG). Three surface electrodes are put on the chest, following standardized points of triangle of Einthoven. The signals measured are amplified and filtered by components in a signal and then they are carried to Arduino UNO card. The ECG sign is sent by BT from Arduino UNO to a mobile device taken by the user, so they can send it to a workstation where the ECG is prepared or analyzed by an expert.

A wearable cardiac monitor for continuous and real time monitoring of user's cardiac condition is introduced in [7]. The proposed device is composed of 3 main components: a disposable electrode, a controller, and personal gateway (e.g., cellular phone, PDA, and smart phone, etc.). The ECG signal is recorded according to the surface Laplacian of the body surface potential.

III. PROPOSED SYSTEM

The proposed system has capability to monitor the patient at real time. The proposed system provides the solution for locating the patient in real-time using GSM, that will enhance the capability of the system in providing the required health care with minimum delay. The proposed system provides freedom of movement for both the patient and the doctor. This system also provides extra services to the doctor for detailed analysis of the available data and prescribing the medicine by online, on his request. This system also provides accessibility of the patient's historic records by any doctor selected by the patient.

The system is also capable to collect the data according to perceived health risk in each patient. Especially this system will be useful before, during, and after a cardiac arrest for continuous monitoring of a patient in the remote location. It can be used for providing health service by specialized doctors, to rural areas.

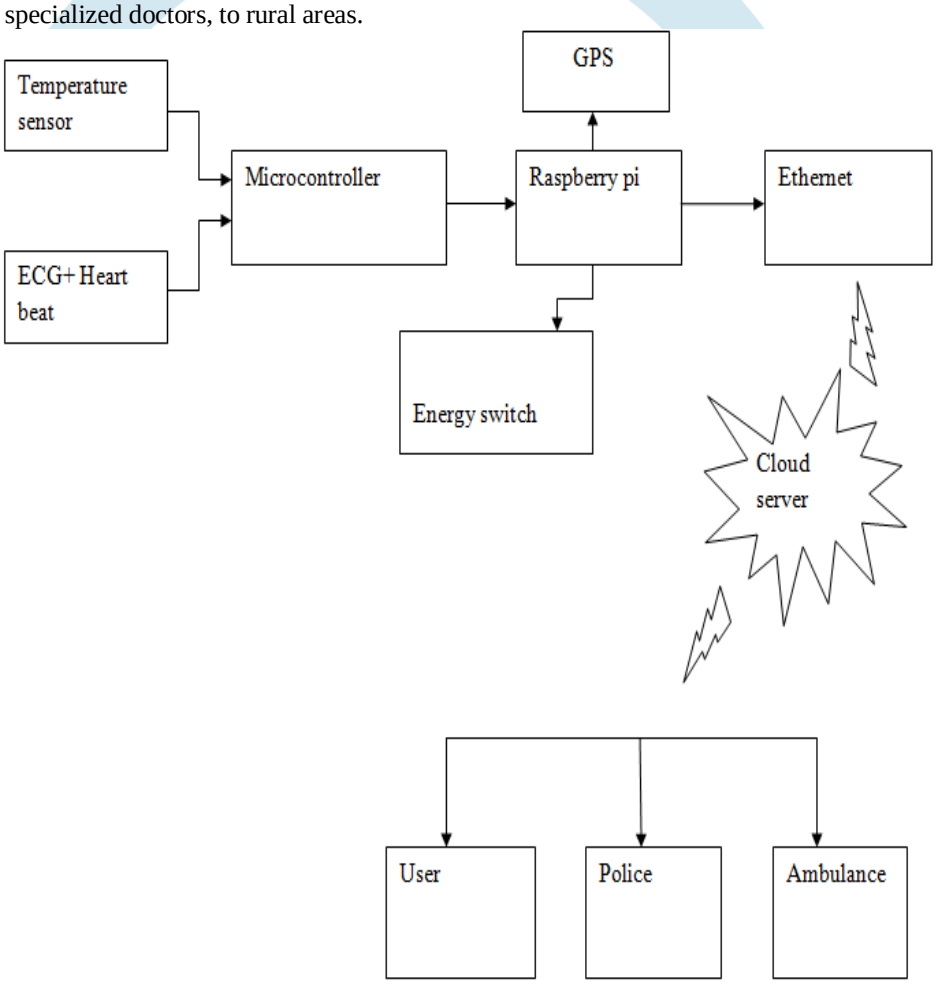

Figure 3.1: proposed system

In this paper, we present the design, development and integration of an extensible architecture for WSN with the Cloud based sensor data platform where info-graphic of different data streams can be displayed, accessed and shared from anywhere with Internet connectivity. The collected data from the sensor nodes are processed, stored and analyzed on server via an Application Programming Interface (API)[4]. We have used REST based Web services as an interoperable application layer that can be directly integrated into other application domains like e-health care services, smart homes, or even vehicular area networks (VAN). For proof of concept in a smart environment, we have implemented a REST based Web services on an IP based low power WSN test bed, which enables data access from anywhere for the smart environment.

IV. SYSTEM IMPLEMENTATION

4.1 MODULE DESIGN

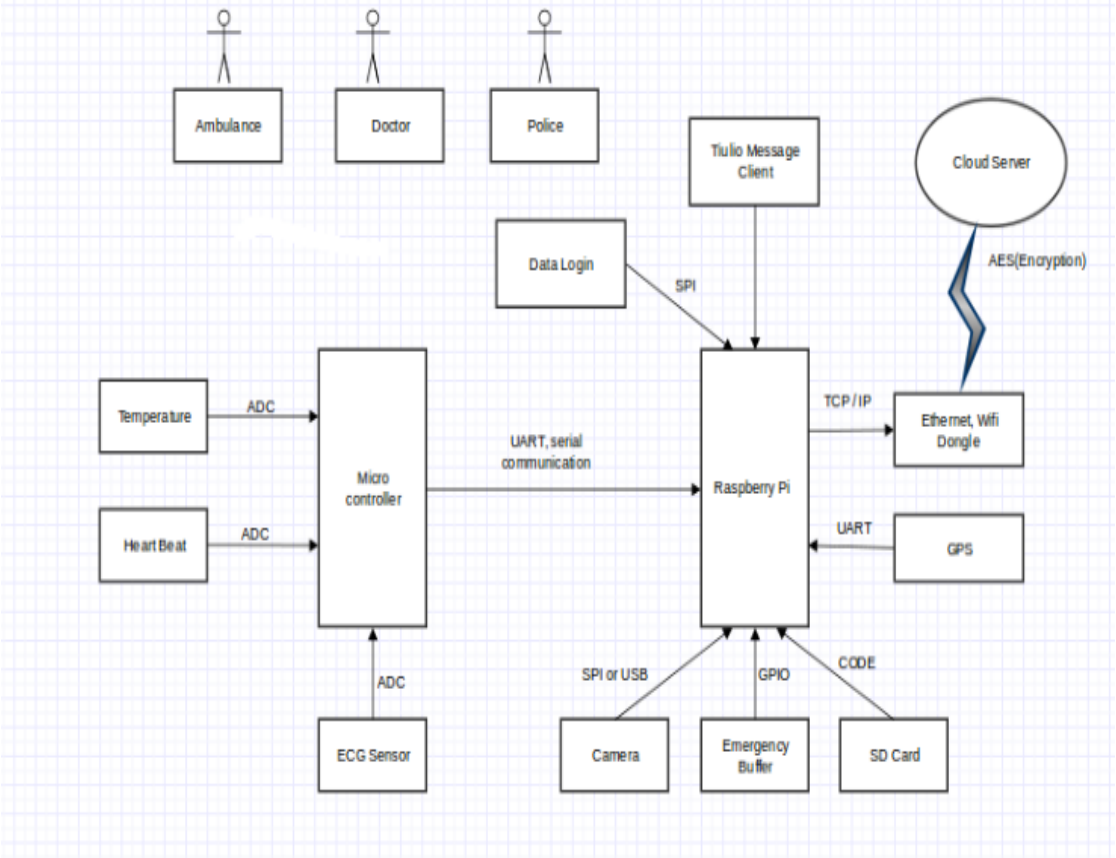

Figure 4.1: Module design

4.2 MODULE DESCRIPTION

MICRO CONTROLLER:

A microcontroller is a small computer on a single integrated circuit containing a processor core, memory, and programmable input/output peripherals. The micro controller used here is ATmega 328. The high-performance Atmel 8-bit AVR RISC-based microcontroller combines 32KB ISP flash memory with read-while-write capabilities, 1KB EEPROM, 2KB SRAM, 23 general purpose I/O lines, 32 general purpose working registers, three flexible timer/counters with compare modes, internal and external interrupts, serial programmable USART, a byte-oriented 2-wire serial interface, SPI serial port, 6-channel 10-bit A/D converter (8-channels in TQFP and QFN/MLF packages), programmable watchdog timer with internal oscillator, and five software selectable power saving modes. The device operates between 1.8-5.5 volts.

The temperature sensor, heart rate sensor and ECG sensor are given to the input /output lines. It has an inbuilt ADC which converts the analogue data values from the sensors to digital.

RASPBERRY PI 2

This model has:

•4 USB ports
•40 GPIO pins
•Full HDMI port
•Ethernet port
•Combined 3.5mm audio jack and composite video
•Camera interface (CSI)
•Display interface (DSI)
•Micro SD card slot
•VideoCore IV 3D graphics core

Because it has an ARMv7 processor, it can run the full range of ARM GNU/Linux distributions, including Snappy Ubuntu Core, as well as Microsoft Windows 10. This module is equipped with GPS for locating the patient position using UART. The data received from the micro controller is transmitted to a cloud server via an Ethernet/wifi module using TCP/IP protocols. It is also equipped with camera and sd card and twelle messege client.

ANDROID APPLICATION

The android application is connected to the hardware via cloud server. The data is received from hardware. Data received displayed on application i.e. temperature and heart rate pulse. This data is analyzed for predicting heart attack. For prediction of heart attack threshold values for heart rate and temperature is set. When the temperature and heart rate will be below or upper the threshold value SMS is sent to patient's relatives, doctor's and hospital's registered number. The SMS contains patient's heart attack parameters and location. Location is tracked via GPS.The application contains the IP address of server to which we wants to send the data for graph plotting. Server contains database also doctor can check graph of heart rate for their convenience.

4.3 IoT-CLOUD COMPUTING TECHNOLOGY

The Internet of Things(IoT) refers to the network of objects, devices, machines, vehicles, buildings, and other physical systems with embedded sensing, computing, and communication capabilities, that sense and share real-time information about the physical world. When connecting the IoT to the Cloud, vast amounts of data collected from multiple locations can be processed and analyzed to create meaningful information for the end users. At the same time, the intrinsic limitations of lightweight mobile devices (e.g., battery life, processing power, storage capacity) can be alleviated by taking advantage of the extensive resources in the cloud.

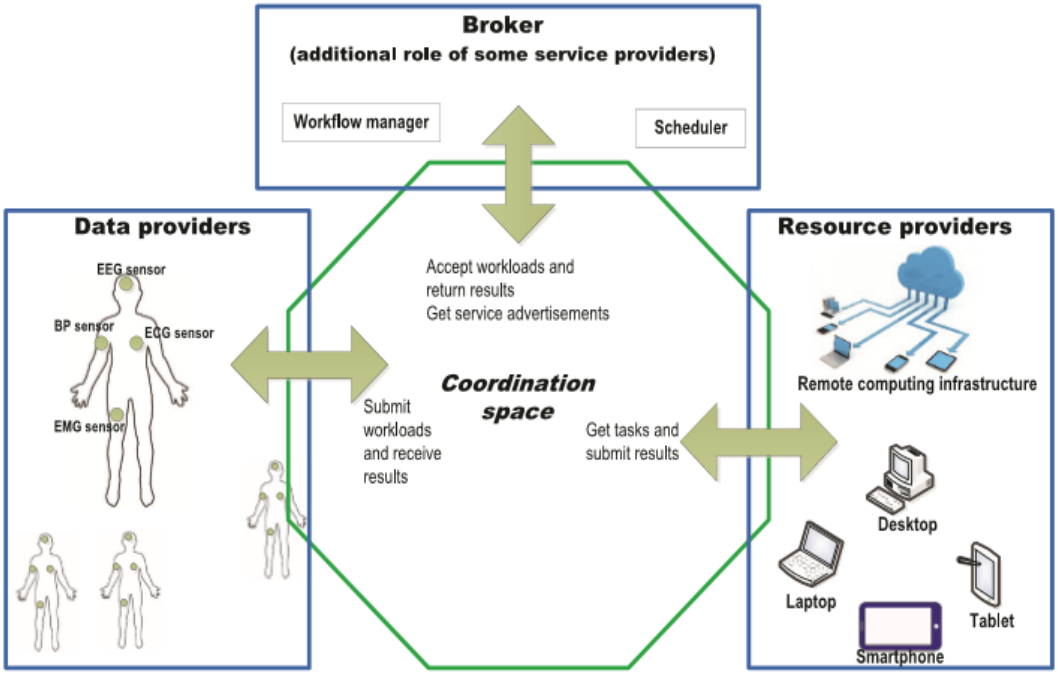

Figure 4.2: IoT workflow

In this paper, we formalize the IoT-CSDP as a service placement and resource allocation problem that goes beyond traditional information services and cloud architectures to include next generation IoT services and IoT-Cloud infrastructures.

V. UML DIAGRAMS

5.1 USE CASE DIAGRAMS

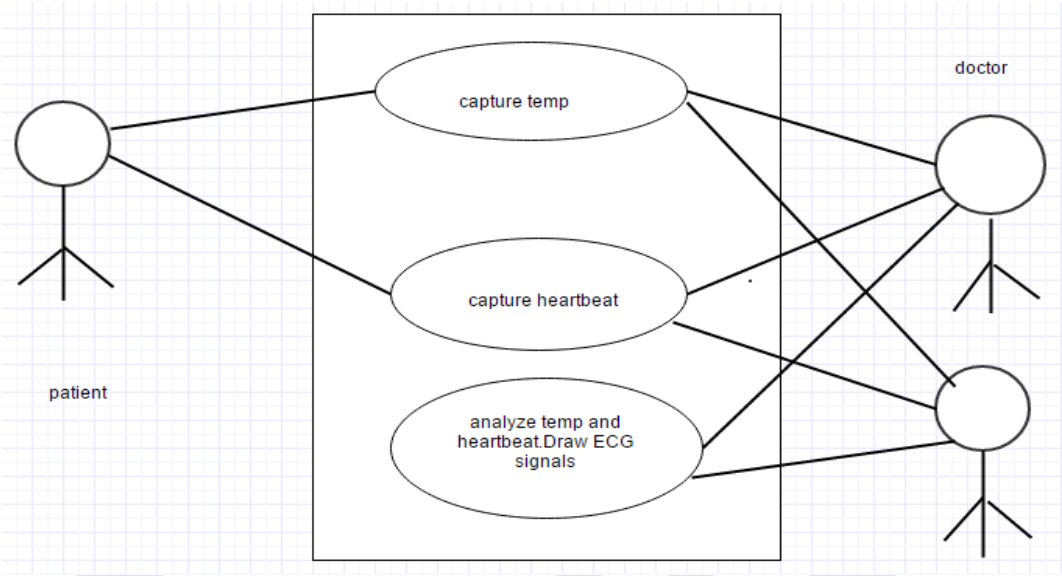

Figure 5.1: use case diagram

5.2 SEQUENCE DIAGRAM

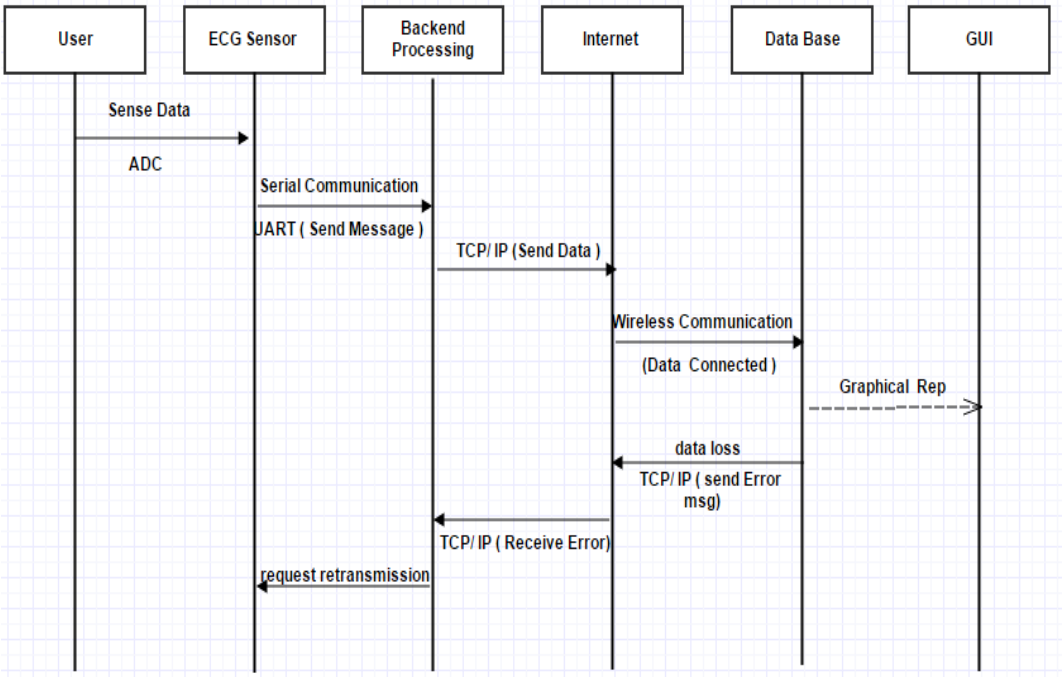

Figure 5.2: sequence diagram

VI. CONCLUSION

A new wearable device for a healthcare monitoring system was proposed in this paper. This paper presents a real-time wireless sensor network system for monitoring and detecting any upcoming cardiovascular disease. The device was implemented in an armband to achieve a non-obstructive system. The bio-signal that was measured in this system is an ECG signal. Although the ECG signal that is received from the arm is quite small, the proposed system was smart enough to over come noise and detect useful information from the recorded signal. In the proposed system, an Android application was also created to achieve a mobile healthcare system. The proposed application can show an ECG signal in real time on a graph and then analyze the data to make smart decisions. The system has capability to monitor multiple patients at a time, to deliver remote diagnosis, and also for providing fast and effective warnings to doctors, relatives, and the hospital. Comparatively, this system can be produced in low cost, since it only needs to develop a wearable wireless sensor system, the software platforms, and the development of data storage capability. The system utilizes the available wireless network for the data transmission, which contributes to the cost reduction.

REFERENCES

[1]Prasad Kumari Nisha , Yadav Vinita, "Heart Rate Monitoring and Data Transmission via Bluetooth ", International Journal of Innovative and Emerging Research in Engineering Volume 2, Issue 2, 2015

[2]Y. Zang, Y. Tian, Z. Wang, Y. Ma and Y. Ma, "An ECG intelligent monitoring system with MSP430 microcontroller," Systems, Signal Processing and their Applications (WoSSPA), 2013 8th International Workshop on, Algiers,2013,pp.214-219.

[3]V. P. Rachim; W. Y. Chung, "Wearable Noncontact Armband for Mobile ECG Monitoring System," in IEEE Transactions on Biomedical Circuits and Systems , vol.PP, no.99,pp.1-7

[4]Ufoaroh S.U ,Oranugo C.O, Uchechukwu M.E , "HEARTBEAT MONITORING AND ALERT SYSTEM USING GSM TECHNOLOGY", International Journal of Engineering Research and General Science Volume 3, Issue 4, July-August, 2015 ISSN 20912730

[5] M. Bhoyar, "HEART ATTACK DETECTION SYSTEM USING ANDROID PHONE," 2016.

[6] M. M. Baig, H. Gholamhosseini, and M. J. Connolly, "A comprehensive survey of wearable and wireless ECG monitoring systems for older adults," vol. 51, no. 5, Jan. 2013.

[7] P. Leijdekkers and V. Gay, "A self-test to detect a heart attack using a mobile phone and Wearable sensors," pp. 93–98, Jul.2008.