# Speed control of Induction motor using Cycloconverter with thyristor

[1]S. V. Thigale, [2]S. H. Tamhane, [3]A. B.Bhapkar, [4]Prof. D. R.Godase

Department of ELEC
Shiv Nagar Vidya Prasarak Mandals College of Engineering
Malegaon(BK), Baramati,India

***Abstract*-This paper represents how to control the speed of Induction motor in three steps by using AC to AC conversion i.e cycloconverter with the help of thyristors. And these three steps are F ,F/2,and F/3.The single phase Induction motor is widely used in the domestic apllications such as washing machine,vacuum cleaner ,etc.The main disadvantage of Induction motor is that it is very costly to vary its speed by using other devices like VFD (variable frequency drive) ,so by using the cycloconverter we can overcome this disadvantage. To select the ranges (F,F/2,F/3)of speed the microcontroller PIC18f458 is used in the operation of an speed control of Induction motor.To vary the frequency of Ac supply at low cost is very difficult so we use the thyristors for its operation.This concept can also used for the three phase Induction motor.**

***Keywords*- Cycloconverter, Induction motor, microcontroller (PIC18f458), Optocoupler, Zerocrossing detection.**

## I.INTRODUCTION

Traditonally we use the converter and inverter to varry the AC supply frequency (i.e. it converts AC to DC by using converter and then inverter for DC to AC) to change the frequency which is very costly and complicated. Due to this switching of AC to DC and DC to AC the noise produces also the harmonics creates so the sensitive electronic devices may get damaged ,if the input and output waveforms is small then subharmonics also get produced and this limitation is overcome by using the cycloconverter i.e. Intermidiate DC stage is not used in this conversion.

The Cycloconverter for the ease of operation. Cycloconverter means to convert the AC supply frequency from one input frequency to another output frequency. Cycloconverter is used for high power applications for driving Induction and synchronous motor. So , cycloconverter is used for providing a variable frequency due to its 4-quadrant operation .Intermidiate DC stage is not used in this conversion. In cycloconverter power flow is bidirectiona

## I.BLOCK DIAGRAM

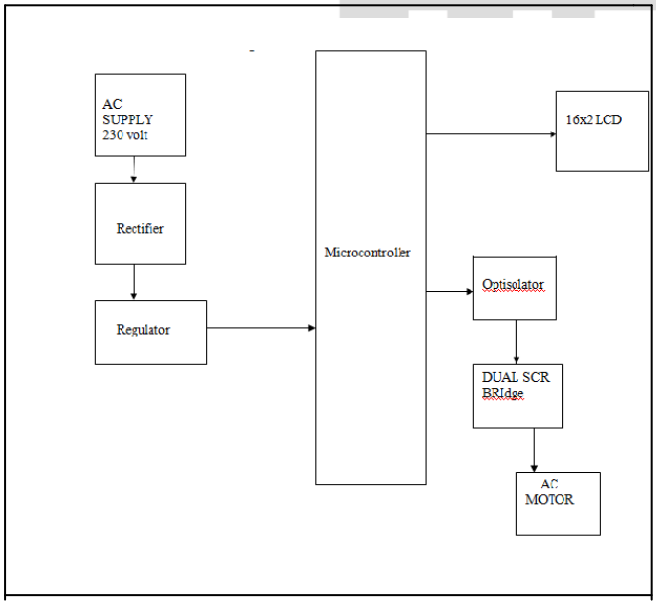


**Fig. 1 Block diagram of speed control of induction motor using Cycloconverter with thyristors**

## II.DESCRIPTION OF BLOCK DIAGRAM:

single phase 230 V Power supply is given the transformer for step down the voltage from 230v AC to 12V AC. The 12v AC is then fed to the bridge rectifier. The rectifier converts 12V ac to12VDC output of the rectifier is fed to the Voltage regulator 7805 it gives the output of 5V DC. The 5V DC is given to Vcc of the micro controller PIC18F4520.The micro controller has been programmed i.e. ASM/C program to give output to optical isolation with zero cross detection circuit. It compares two signals in order to get zero crossing whenever the zero crossing occurs it gives an output. A microcontroller programme is developed to control the firing pulses of gate driving circuit, these firing pulses are controlled by DIACs. The output of the cyclo-converter is fed to the induction motor to control the speed at different frequencies.The circuit uses standard power supply comprising of a step-down transformer from230V to 12V and 4 diodes forming a full-bridge rectifier that delivers pulsating dc which is then filtered with LC filter of 470µF to 1000µF. Toregulate the dc power supply, IC LM7805 is used toget constant 5V DC its pin no 3 irrespective of input DC varying from 7V to 15V. The input dc shall be varying in the event of input ac at 230volts section varies from 160V to270V in the ratio of the transformer primary voltage V1 to secondary voltage V2 governed by the formulaV1/V2=N1/N2. As N1/N2 i.e. no. of turns in the primary to the no. of turns in the secondary remains unchanged V2 is directly proportional to V1. The regulated 5V DC is further filtered by asmall electrolytic capacitor of 10µF for any noise so generated by the circuit. One LED is connected of this 5V point in series with a current limiting resistor of 330Ω to the ground i.e., negative voltage to indicate 5V power supply availability.

## III.CIRCUIT DIAGRAM

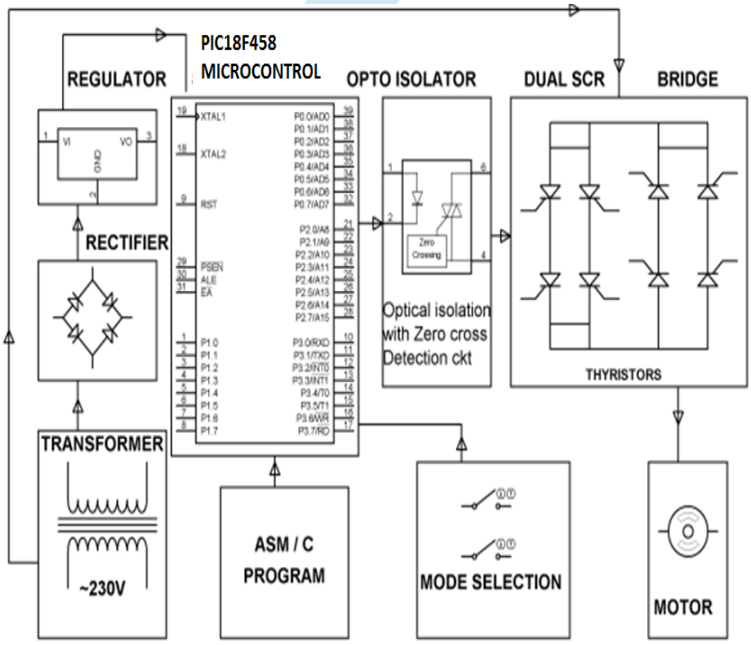


## IV.WORKING

Cyclo-converter consists of two single phase full bridge circuits bridge1 and bridge 2,loadis connected in between these two bridge circuits as shown in figure.each bridge consistsof fourthyristors. From these upper group thyristors are positive and lower group are negative group thyristors. These thyristors gate pulses are controlled by zero crossing detector and microcontroller. The firing angle control consists of eight MOC 3021 opto-isolators. MOC 3021 contains a LED and a light sensitive TRIAC. When the LED s switched on then the TRIACs in MOC3021 gets the input and they turn on. The opto-isolators (MOC 3021) isolates the high frequency modulated driver control circuit with low frequency cyclo converter circuit. At time t=0+the thyristors on the 1Bridge to switch on for predefined time period t, duringthis time period tother bridge is kept off position.To control the speed of the induction motor frequency control of the output voltage by turn-ONand turn- Off time periods of the thyristors. When the switch 1 is closed SCR gets conductingfor 20ms for 1s1 bridge and next 20ms for 2bridgeso the total time period of AC cycle is 40ms so itgives the frequency 25Hz i.e. F/2. When the switch 2 closed the time period of conduction for the 1st bridge takes place for 30msand then other bridge for 30ms.so the total time period of AC cycle is 60ms 16.66 Hz i.e. F/3. This supply is given to the motor by using F/2 and F/3supply we can control the speed of the AC motor.

## V. CONCLUSION

In manufacturing and process industries, the variable frequency is required for driving various electrical machineries. The cyclo-converter or variable frequency generator plays a significant role in driving those electrical machineries. The study mainly focuses on the design and construction of the single phase cyclo-converter. The commercially designed single phase cyclo-converter circuit may use different design pattern than this one. This single phase cyclo-converter circuit can be extended further for three

phase application. In case of the three phase cyclo-converter, each of the positive and negative converter group operates for half the period of the output frequency.

**REFERANCES**

[1].Sathish Bakanagari1, Jagadeesh Peddapudi2, A. Mahesh Kumar3
i.(Asst. Prof in EEE Department) Mahaveer Institute of Science and Technology, bandlaguda, Hyderabad. A.P.
ii.(Assoc. Prof in EEE Department) Guru Nanak Engineering Colleges, Ibrahimpatnam, R.R.dist, A.P.

[2].B. R. Pelly
Thyristor Phase-Controlled Converters and Cyclo-converters, Wiley, New York, 1971

[3]. Jean-Dominique Warnier
"Logical Construction of Programs" H.E. Stenfert Kroese B.V. - Leiden.

[4].Manishkumar M. Tayade and S.S. Dhamse Cyclo-converter Drive for AC Motors