AUTOMATIC IRRIGATION SYSTEM USING SENSORS AND MICRO CONTROLLERS

[1]Princy George, [2]Naveen Davis, [3]Tom Joseph, [4]Rahul John

[1]Assistant Professor, [2,3,4]Btech Graduate
Department of Computer Science Engineering,
Sahrdaya College of Engineering and Technology, Thrissur, India

***Abstract*—The motivation for this project came from the countries where economy is based on agriculture and the climatic conditions lead to lack of rains & scarcity of water. The farmers working in the farm lands are solely dependent on the rains and bore wells for irrigation of the land. Even if the farm land has a water-pump, manual intervention by farmers is required to turn the water on/off whenever needed. The aim of the project is to minimize this manual intervention by the farmer, which is why we are using a micro-controller. The micro-controller based Automated Irrigation system will serve the following purposes. The project deals with the fully Automated irrigation system ,Automation of watering the plants by sensing the moisture content of the soil, Automation of water tank filling by sensing the water level in the tank, Automation of finding leakage in water distribution pipes.**

***Index Terms*—sensor, microcontroller, automation**

- **Introduction**

The undertaking is intended to build up a programmed water system framework which switches the pump engine ON/OFF on detecting the dampness substance of the dirt. In the field of agribusiness, utilization of appropriate strategy for water system is critical. The task utilizes a 8051 arrangement microcontroller which is customized to get the information sign of shifting dampness state of the dirt through the detecting game plan. This is accomplished by utilizing an operation amp as comparator which goes about as interface between the detecting course of action and the microcontroller. Once the controller gets this sign, it produces a yield that drives a transfer for working the water pump and water the plants .

It can consequently switch ON and OFF the household water pump set contingent upon the tank water level. The circuit is work around a straightforward flip-flop, which naturally set and reset regarding the water level present in the water tank. Two tests are plunged in the tank (one is on the top side and other is at base) to check the nearness of water and these tests are the contribution to the advanced rationale circuit.It additionally contains some assurance component keeping in mind the end goal to shield the engine from Dry-run conditions,For this reason we are dunking a test in the water source (Well,Ponds, and so forth.) and the circuit recognize the accessibility of water in the source, when there is no water in the source, the entire framework will be closed down generally the engine may blaze.

In this undertaking we work towards another in-funnel spill identification framework. Our proposed framework can distinguish spills in funnels in a solid and self-sufficient design. The thought is that it is embedded into the system by means of uncommon inclusion focuses. The framework assesses the system and sends flags remotely by means of hand-off stations to a PC/base station. Spill signals emerge plainly on the event of breaks, dispensing with the requirement for the client experience.The last is accomplished by means of a finder that depends on distinguishing a reasonable weight inclination in the region of holes. Identification depends on recognizing the presence of a confined weight angle ($\partial p/\partial r$, where r remains for the outspread direction of the funnel). This weight inclination shows up dependably in pressurized channels in the region of releases and is autonomous of the funnel size and/or funnel material. Additionally, the weight inclination exists in various media inside channels, which makes the recognition technique broadly relevant (gas, oil, water funnels, and so on.). Also, the proposed finder can sense spills at any point around the perimeter of the funnel with just two sensors.

.

- **LITERATURE SURVEY**

Nagarajapandian , Ram Prasanth , Selva Kumar and Tamil Selvan proposed that the limit of soil to hold water is a component of soil surface and structure. While evacuating a dirt specimen, the soil being assessed is exasperates, so its water-holding limit is adjusted. Roundabout techniques for measuring soil water are useful as they permit data to be gathered at the same area for some perceptions without exasperating the dirt water framework. Additionally, generally aberrant techniques decide the volumetric soil water content with no requirement for soil thickness assurance. The new soil dampness sensoruses Immersion Gold which ensures the nickel from oxidation. Cathodes nickel submersion gold (ENIG) has a few points of interest over additional routine (and less expensive) surface plating, for example, HASL (weld), including fantastic surface planarity (especially supportive for PCB's with substantial BGA bundles), great oxidation resistance, and ease of use for untreated contact surfaces, for example, layer switches and contact focuses. A dirt dampness sensor can read the measure of moisturepresent in the dirt encompassing it. It's a low tech sensor, however perfect for checking a urban greenery enclosure, or your pet plant's water level. This is an absolute necessity have device for a associated garden. This sensor utilizes the two tests to go current through the dirt, and afterward it peruses that imperviousness to get the dampness level. More water makes the dirt behavior power all the more effortlessly (less resistance), while dry soil conducts power ineffectively (more resistance).

.III.EQUIPMENTS REQUIRED

The components required foe development of our project are:

- moisture sensor
- GPS
- Ultrasonic sensors
- Motor
- Arduino
- Buzzer
- Pic micro controller

SOIL MOISTURE SENSOR

Soil moisture sensors measure the volumetric water content in soil.[1] Since the direct gravimetric measurement of free soil moisture requires removing, drying, and weighting of a sample, soil moisture sensors measure the volumetric water content indirectly by using some other property of the soil, such as electrical resistance, dielectric constant, or interaction with neutrons, as a proxy for the moisture content. The relation between the measured property and soil moisture must be calibrated and may vary depending on environmental factors such as soil type, temperature, or electric conductivity. Reflected microwave radiation is affected by the soil moisture and is used for remote sensing in hydrology and agriculture. Portable probe instruments can be used by farmers or gardeners.

Soil moisture sensors typically refer to sensors that estimate volumetric water content. Another class of sensors measure another property of moisture in soils called water potential; these sensors are usually referred to as soil water potential sensors and include tensiometers and gypsum blocks.

ULTRASONIC SENSORS

An Ultrasonic sensor is a device that can measure the distance to an object by using sound waves. It measures distance by sending out a sound wave at a specific frequency and listening for that sound wave to bounce back. By recording the elapsed time between the sound wave being generated and the sound wave bouncing back, it is possible to calculate the distance between the sonar sensor and the object.

$$distance = \frac{speed\ of\ sound\ \times time\ taken}{2}$$

Since it is known that sound travels through air at about 344 m/s (1129 ft/s), you can take the time for the sound wave to return and multiply it by 344 meters (or 1129 feet) to find the total round-trip distance of the sound wave. Round-trip means that the sound wave traveled 2 times the distance to the object before it was detected by the sensor; it includes the 'trip' from the sonar sensor to the object AND the 'trip' from the object to the Ultrasonic sensor (after the sound wave bounced off the object). To find the distance to the object, simply divide the round-trip distance in half. It is important to understand that some objects might not be detected by ultrasonic sensors. This is because some objects are shaped or positioned in such a way that the sound wave bounces off the object, but are deflected away from the Ultrasonic sensor. It is also possible for the object to be too small to reflect enough of the sound wave back to the sensor to be detected. Other objects can absorb the sound wave all together (cloth, carpeting, etc), which means that there is no way for the sensor to detect them accurately. These are important factors to consider when designing and programming a robot using an ultrasonic sensor.

MOTOR

TowerPro MG996R Servo

Modulation:	Digital
Torque:	4.8V: 130.54 oz-in (9.40 kg-cm) 6.0V: 152.76 oz-in (11.00 kg-cm)
Speed:	4.8V: 0.19 sec/60° 6.0V: 0.15 sec/60°
Weight:	1.94 oz (55.0 g)
Dimensions:	**Length:**1.60 in (40.7 mm) **Width:**0.78 in (19.7 mm) **Height:**1.69 in (42.9 mm)
Gear Type:	Metal
Rotation/Support:	Dual Bearings
Pulse Cycle:	1 ms
Connector Type:	JR

ARDUINO

Arduino/Genuino Uno is a microcontroller board based on the ATmega328P (datasheet). It has 14 digital input/output pins (of which 6 can be used as PWM outputs), 6 analog inputs, a 16 MHz quartz crystal, a USB connection, a power jack, an ICSP header and a reset button. It contains everything needed to support the microcontroller; simply connect it to a computer with a USB cable or power it with a AC-to-DC adapter or battery to get started.. You can tinker with your UNO without working too much about doing something wrong, worst case scenario you can replace the chip for a few dollars and start over again. "Uno" means one in Italian and was chosen to mark the release of Arduino Software (IDE) 1.0. The Uno board and version 1.0 of Arduino Software (IDE) were the reference versions of Arduino, now evolved to newer releases. The Uno differs from all preceding boards in that it does not use the FTDI USB-to-serial driver chip. Instead, it features the Atmega16U2 (Atmega8U2 up to version R2) programmed as a USB-to-serial converter.

Microcontroller	ATmega328P
Operating Voltage	5V
Input Voltage (recommended)	7-12V
Input Voltage (limit)	6-20V
Digital I/O Pins	14 (of which 6 provide PWM output)
PWM Digital I/O Pins	6
Analog Input Pins	6
DC Current per I/O Pin	20 mA
DC Current for 3.3V Pin	50 Ma
Flash Memory	32 KB (ATmega328P) of which 0.5 KB used by bootloader
SRAM	2 KB (ATmega328P)
EEPROM	1 KB (ATmega328P)
Clock Speed	16 MHz
LED_BUILTIN	13
Length	68.6 mm
Width	53.4 mm
Weight	25 g

PIC MICRO CONTROLLER (*PIC16F877A*)

This section forms the control unit of the whole project. This section basically consists of a Microcontroller with its associated circuitry like Crystal with capacitors, Reset circuitry, Pull up resistors (if needed) and so on. The Microcontroller forms the heart of the project because it controls the devices being interfaced and communicates with the devices according to the program being written. PIC is a family of modified Harvard architecture microcontrollers made by Microchip Technology, derived from the PIC1650originally developed by General Instrument's Microelectronics Division. The name PIC initially referred to Peripheral Interface Controller. This feature a 14-bit wide code memory and an improved 8 level deep call stack. The instruction set differs very little from the baseline

BUZZER

This is the Arduino Buzzer Module. Through the Arduino or other controllers, this module will be able to control the buzzer sounds or MID music easily. It is extended with the Arduino board sensors used in combination, to achieve the control of an interactive sound and light works.

IV.PROPOSED SYSTEM

The proposed system is an automated irrigation system, which consists of automated sprinkler system which will provide water required for plants by checking moisture in the soil. The system have an automated tank filling system in which it avoids the over filling of water in the water tank. The system also finds out the leakage across the pipes.

The aim of the project is to minimize this manual intervention by the farmer, which is why we are using a micro-controller and sensors. The primary applications for this project are for farmers and gardeners who do not have enough time to water their crops/plants. It also covers those farmers who are wasteful of water during irrigation. The project can be extended to greenhouses where manual supervision is far and few in between. The principle can be extended to create fully automated gardens and farmlands. Combined with the principle of rain water harvesting, it could lead to huge water savings if applied in the right manner. In agricultural lands with severe shortage of rainfall, this model can be successfully applied to achieve great results with

most types of soil. Going through the planning, flow process, design and software implementation, the system has been a tough one, the chapter one to four has actually tried as much as possible to explain vividly almost all (if not all) what is involved in the construction of this project. After the complete design of the system, the deviation between the expected result and the actual result was very close. The performance and efficiency was beyond expectation and from every ramification the design of automatic water controller was successful

V.CIRCUIT DIAGRAM

a. ultrasonic sensor arrangement (automatic tank filling**)**

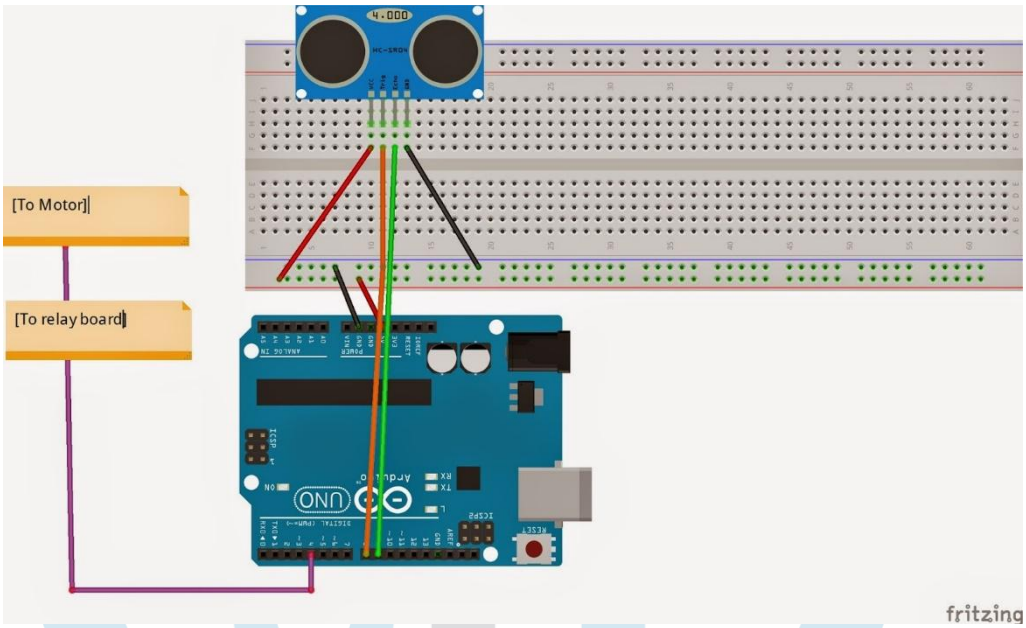

b. water flow sensor arrangement (leak detection)

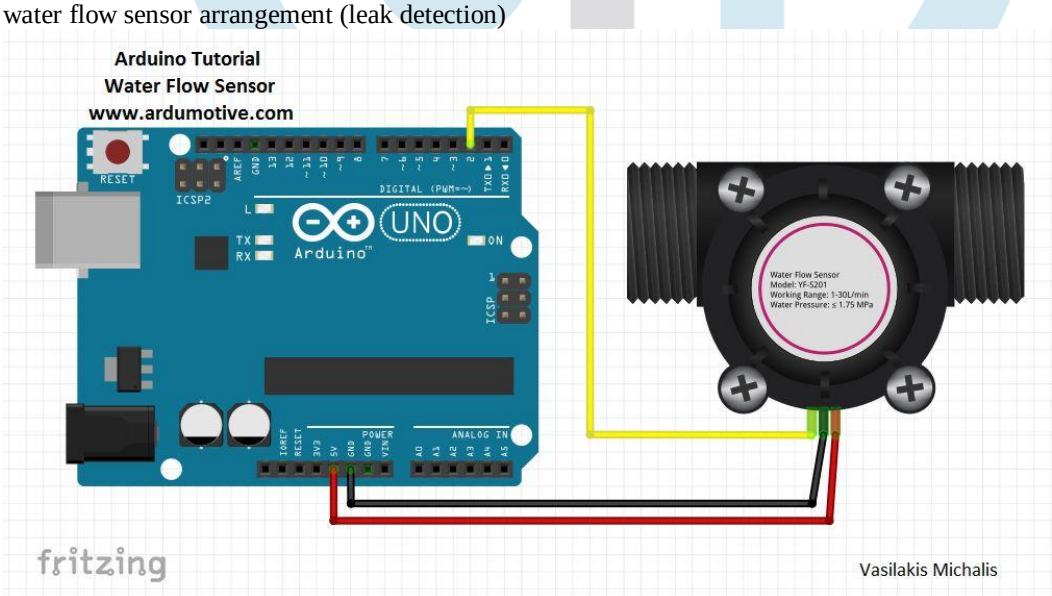

c. sprinkler system

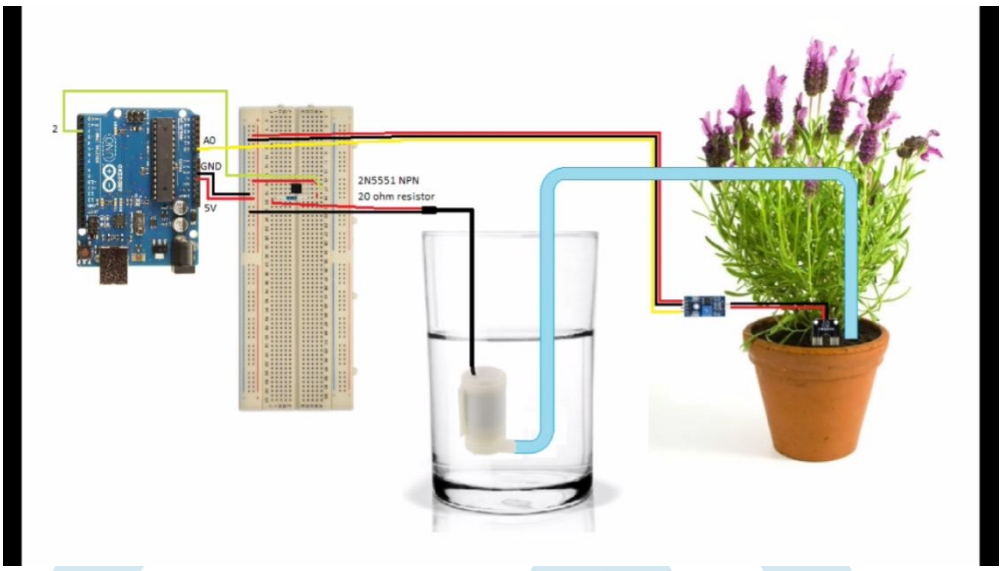

IX. CONCLUSION

An automated irrigation was successfully designed. It serves to reduce the consumption of water used, the human monitoring time and the labour associated with standard methods .This design uses a timed feedback control to measure the soil moisture and turn on the valve on demand, in regular intervals. Such a system can be manufactured at a relatively low cost using simple electronic parts. The soil moisture probe is the most expensive component. This system helps in reducing the manual work and provides required irrigation to the agricultural field. As it is completely automatic system, the farmer just need to plant the crops after that complete watering will be done automatically. This system provides a proper irrigation setup which will help the farmer to yield maximum profit.

REFERENCES

[1] Klute, A. (ed.), 1986: Methods of Soil Analysis, Part 1: Physical and Mineralogical Methods.American Society of Agronomy, Madison, Wisconsin, United States, 1188 pp.

[2] Knight, J.H., 1992: Sensitivity of time domain reflectometry measurements to lateral variations in soil water content. Water Resources Research, 28, pp. 2345–2352.

[3] Magagi, R.D., Kerr, Y.H., 1997. Retrieval of soil moisture and vegetation characteristics by use of ERS-1 wind scatterometer over arid and semi-arid areas. Journal of Hydrology 188-189, 361–384.

[4] Marthaler, H.P., W. Vogelsanger, F. Richard and J.P. Wierenga, 1983: A pressure transducer for field tensiometers. SoilScience Society of America Journal, 47, pp. 624–627.

[5] Attema, Evert, Pierre Bargellini, Peter Edwards, Guido Levrini, SveinLokas, Ludwig Moeller, BetlemRosich-Tell, et al 2007. Sentinel-1 - the radar mission for GMES operational land and sea services. ESA Bulletin 131: 10-17.

[6] Bircher, S., Skou, N., Jensen, K.H., Walker, J.P., & Rasmussen, L. (2011). A soil moisture and temperature network forSMOS validation in Western Denmark. Hydrol. Earth Syst. Sci. Discuss., 8, 9961-10006.