Multiphase Interleaved DC-DC Converters

[1]Prajwalita Avasarala, [2]Vinayak Dabholkar

[1]Assistant Professor, [2]Application Engineer
Electronics and Communications Engineering Department,
Agnel Institute of Technology and Design, Goa, India

***Abstract*—The new high performance microprocessors require the power supply to provide high current, fast transient response, and tight voltage regulation. Interleaved multiphase synchronous buck converters have recently been adopted in the industry to meet the requirements.Thispaper presents the analysis of Buck converters to improve their transient response for load steps and the implementation of the outcome of the analysis in the design of a interleaved multiphase buck.**

***IndexTerms*— Interleaved, Buck converters**

I. INTRODUCTION

Present day microprocessors require low supply voltages to keep the power consumption low and high currents for faster speed of operation. Accurate supply voltage regulation cannot be achieved by a centralized power system so there is a need for a distributed power system. Present day voltage regulator modules (VRM) are designed to meet these needs. When a system changes from deep sleep mode to the active mode and vice versa, fast supply voltage and load current switching are necessary for lower latency. This motivates the need of high performance DC-DC converters with faster dynamic responses in reference tracking and load transient. Multiphase interleaved buck converters have improved transient response as compared to single phase buck.

II. SYNCHRONOUS BUCK CONVERTER

The difference between a regular buck converter and a synchronous buck converter is that the freewheeling diode in the regular buck converter is replaced by another switch.This replacement basically enhances the efficiency of the buck converter since diode's forward voltage drop is one of the reasons of poor efficiency of the converter at low voltage and high current output In addition to the switch, usually another Schottky diode is placed in parallel in order to further reduce the reverse recovery loss and to provide the dead time required to avoid a dead short due to simultaneous conduction of both switches.
\indent In terms of its operation, synchronous buck works the same way as that of the basic buck converter. Referring to Figure, first switch QI turns on and the current flows through it to charge inductor L. After some time Q, turns off and Q2 gets turned on.
Now the inductor will discharge through or freewheel Q2. To prevent the circuit from input current spike, there is always a delay between turning on and off of two switches and that delay is called the dead time. A Schottky or a fast reverse recovery diode connected in parallel with Q2 serves the purpose of conducting during that dead time with less forward voltage drop before the next cycle starts. [1].

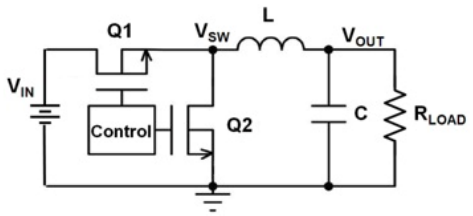

Figure 1. Single phase synchronous buck converter

III. ISSUES WITH SINGLE SYNCHRONOUS BUCK CONVERTER

The low output voltage and high output current requirements of the future make the synchronous buck a less ideal solution. According to the output voltage relation this topology suffers very small duty cycle. This increases turn off loss on the top switch and conduction loss on the bottom switch. To reduce output voltage ripple in a synchronous buck, switching frequency is increased. This increase in switching frequency results in switching, gate drives and body diode losses.These losses are directly proportional to switching frequency. To reduce output voltage ripple at lower frequency operation higher filter inductance is used which limits the transient response and it translates to limiting energy transfer speed. Huge output capacitor is needed to reduce the

output voltage ripple as well as help in reducing voltage spike during the transient. the large sized capacitor would increase the size and make the module impractical.Capacitance can be reduced by increasing the current slew rate which is possible by using smaller filter inductances. However small inductances result in large current ripples during the circuit's steady state operation. The large current ripples generate steady state voltage ripples at the VRM output capacitor. The steady state output voltage ripples can be so large that they are comparable with transient voltage spikes. It is not only harmful action for the top switch due to larger turn off loss, but also for the bottom switch due to larger conduction loss. [1]

IV. INTERLEAVED MULTIPHASE BUCK CONVERTER

The fundamental limitation of the conventional single-phase buck converter is the tradeoff of efficiency and switching frequency. Output ripple and dynamic response improve with increased switching frequency. The physical size and value of the filter inductor and capacitors become smaller at higher switching frequencies. There is, however, a practical limitation to the switching frequency: switching losses increase with frequency, and resulting efficiency tends to be lower. The multiphase buck topology offers a solution to this conundrum. The fundamental frequency is effectively multiplied by the number of phases used, improving transient response. Other advantages of this solution include reduced input and output capacitor RMS currents and reduced EMI filtering requirements; decreased PCB size; better thermal performance. [1]

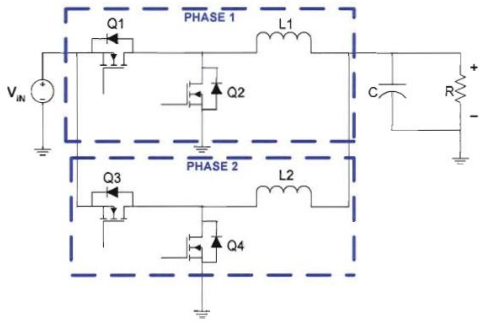

Figure 2. Multiphase Buck Converter

In a Multiphase Converter, each buck has a switching control signal with phase difference of 360°/N where N is the phase number. So in case of the two phases, each phase control signal is shifted from each other by 180°. In case of four phases, control signal for each phase is shifted from each other by 90° degrees and so on.Multiphase converter combines all phase shifted inductor currents from individual channel or phase, and therefore greatly reduces the total current ripple flowing into the output capacitor.The reduced output ripple voltage in turn allows for more room for voltage variations during load transient because the ripple voltage will consume a smaller portion of the total voltage tolerance budget.The multiphase buck increases the total output current frequency. The output current frequency is the multiple of the number of phases times the switching frequency of each buck converter, i.e. f_{Total}= f*N. This provides another benefit of multiphase since the higher the output frequency the less filtering effort needed, further reducing the amount of output capacitance.For interleaving of multiphase buck, there must be at least a minimum of two phases in a module and at least two modules.

Table 1.Specifications for Open Loop Multiphase Buck Converter

Parameters	**Values**
Vin	12 V
Vo	1.6 V
Io	130 A
Iripple	26 A
Vripple	32 mV
Iocritical	13 A
D	0.133
Fsw	500 kHz
L	600 nH
C	27 uF

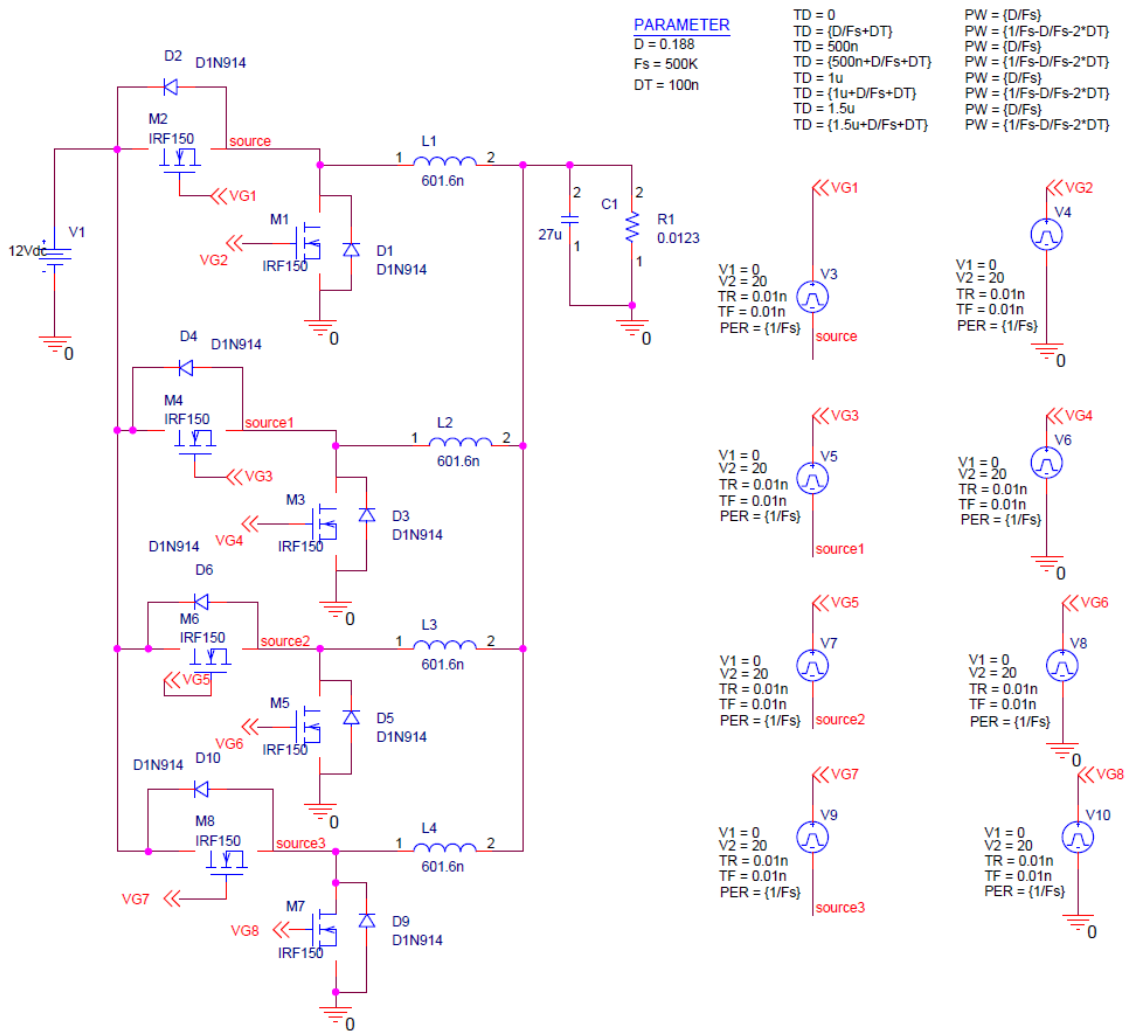

Figure 3. Design of Open Loop Multiphase Buck Converters

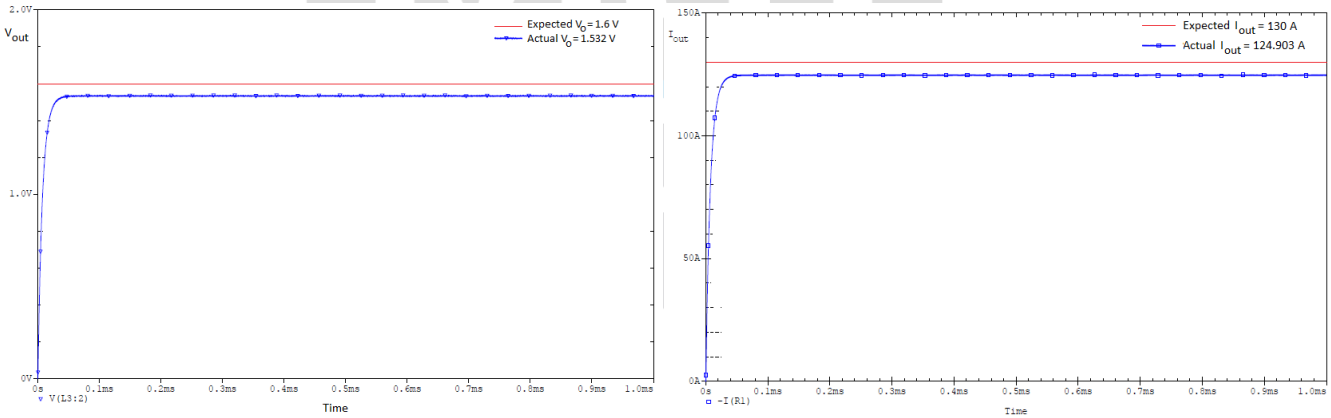

Figure 4. Open loop Single Phase DC Buck Converter Output Voltage and Current

V. CONCLUSION

The paper proposes the design of an open loop DC-DC buck converter for lowvoltage-high current applications.A multiphase interleaved buck is introducedto overcome the limitations of the synchronous buck.

REFERENCES

[1] FurqanMubashirSaleemi.Analysis and Design of Multiphase Multi Interleave DC-DC Converter with Input -Output Bypass Capacitor,a thesis presented at California Polytechnic State University.

[2]Kaiwei Yao, Senior Member, IEEE, YuanchengRen, and Fred C. Lee, Fellow, IEEE.Critical Bandwidth for the Load Transient Response of Voltage Regulator Modules,IEEE TRANSACTIONS ON POWER ELECTRONICS, VOL. 19, NO. 6, NOVEMBER 2004.

[3] Pit-Leong Wong, Member, IEEE, Fred C. Lee, Fellow, IEEE, PengXu, Member, IEEE, and Kaiwei Yao, Student Member,IEEE.Critical Inductance in Voltage Regulator Modules,IEEE TRANSACTIONS ON POWER ELECTRONICS, VOL. 17, NO. 4, JULY 2002.

[4] M. Ordonez, J.E. Quaicoe, and M.T. Iqbal,Faculty of Engineering & Applied Science,Memorial University of Newfoundland,St. John's, NL, A1B 3X5, Canada.Critical Parameters in the Transient Response of Synchronous Buck Converters.

[5] Yuri Panov and Milan M. Jovanovic´, Fellow, IEEE.Design Considerations for 12-V/1.5-V, 50-A Voltage Regulator Modules,IEEE TRANSACTIONS ON POWER ELECTRONICS, VOL. 16, NO. 6, NOVEMBER 2001.

[6] Amir M. Rahimi, ParvizParto, and PeymanAsadi.Compensator Design Procedure for Buck Converter with Voltage-Mode Error-Amplifier,Application Note AN-1162,International Rectifier.

[7] Loop Compensation of Voltage-Mode Buck Converters,Application Note ANP 16,SIPEX.