SOFT STARTING OF THREE PHASE INDUCTION MOTOR

[1]Mr. Satpute Akshaykumar, [2]Mr. Tambe Sagar, [3]Mr. Shinde Vijay, [4]Prof. Mone P.P.

Department of Electrical Engineering
SVPM's College of Engineering
Malegaon (Bk), Tal-Baramati, Dist-Pune, Savitribai Phule Pune University.

***Abstract*— This paper, present a soft starting of induction motor. At the time of starting three phase induction motor takes very large current and have low power factor. Due to high current, motor torque content ripples and transients. Due to transients and torque pulsation shaft of motor experiences jerk hence mechanical life of rotor reduces. In order to mitigate this adverse effect if starting current and torque pulsation in induction motor, a popular method is used which is electronically controlled soft starting of induction motor. Normally soft starters are used for avoiding this problems and soft start is achieved by increasing stator frequency. By using soft starter performance of induction motor is improved and also improved load torque characteristics.**

***Keywords*— Three phase induction motor, microcontroller, and PWM inverter.**

I. INTRODUCTION

The ac motor starters employing power semiconductors are being increasingly used to replace electromagnetic line starters and conventional reduced-voltage starters because of their controlled soft-starting capability with limited starting current. Thyristor-based soft starters are cheap, simple, reliable, and occupy less volume, and therefore, their use is a viable solution to the induction motor (IM) starting problem.

Depending on the initial switching instants of all the three phases to the supply, an IM may produce severe pulsations on the electromechanical torque, regardless of whether it is controlled by a direct-online starter or a soft starter . The electromagnetic-torque pulsations may cause shocks to the driven equipment and damage to mechanical system components, such as shafts, couplings, and gears, immediately if the strength of materials is exceeded, or in the long term, owing to fatigue. Smooth acceleration reduces also stress on the electrical supply due to high starting currents meeting utility requirements for reduced voltage starting and eliminating voltage dip and brown out conditions. It reduces also the shock on the driven load due to high starting torque that can cause a jolt on the conveyor that damages products, or pump cavitations and water hammer in pipes. Thus, a fully adjustable acceleration (ramp time) and starting torque for optimal starting performance, provides enough torque to accelerate the load while minimizing both mechanical and electrical shock to the system.

II. PROBLEM DEFINATION

In industries mostly induction motors are used for many operations. Mostly in conveyer, when induction motor is starts it experiences jerk. Due to jerk mechanical life of rotor get reduced. Also when we start induction motor it get high starting current. Due this high starting current motor winding is heated and have chances of insulation burning. In this project we use VFD for vary the frequency. By varying frequency we can control the current of motor hence we get soft starting of induction motor.

III.BLOCK DAIGRAM

The fig.1 shows the block diagram of "Soft starting of three phase induction motor". This design contains microcontroller, three phase bridge rectifier, PWM inverter, and Induction motor. DC supply is given to microcontroller from step down transformer, regulator. Soft starter is used for giving soft starting of induction motor. Filter circuit is used to remove harmonics from output of PWM inverter.

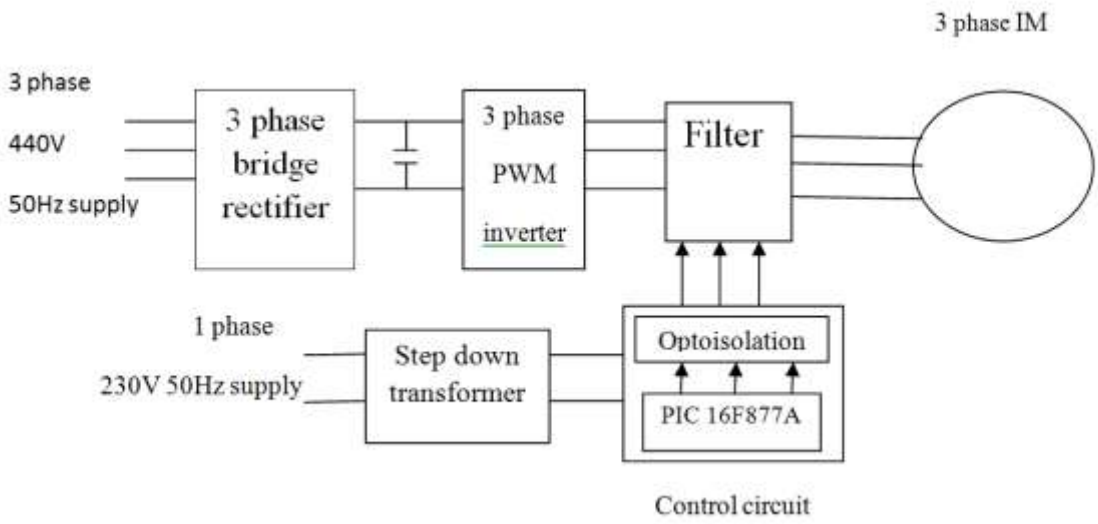

Fig. 1 Block diagram of soft starting of 3 phase IM

IV. PRINCIPLE OF OPERATION

This project is based on soft starting of induction motor. A six step bridge is used for three phase inverter by using six switches, with two switches for each phase. Each step is defined as a change in the time of operation for each IGBT to the next IGBT in proper sequence. For one cycle of 3600, each step would be of 600 intervals for a six step inverter. Figure 3.5 shows the power circuit diagram of a three phase bridge inverter using six IGBTs. The source voltage Vs fed from three phase uncontrolled rectifier. Large capacitors (C1=Vs /2 and C2=Vs /2) are connected at the input terminal to make the DC input constant and also to suppress the harmonics fed back to the source (Bimal Bose 2002). T1, T2, T3, T4, T5 and T6 are the IGBTs switch. In figure 3.5 shows a, b, and c are the output terminals of the switched mode PWM inverter. This output terminals fed by three phase induction motor, where n is three phase induction motor neutral. There are two patterns of gating the transistors. In one pattern, each transistor conducts for 180 degree and in the other, each transistor conducts for 120 degree. But in both the patterns gating signals are applied and removed at 60 degree intervals of the output voltage waveform. Both modes require a six step bridge inverter.

V. ADVANTAGES:

- Smooth acceleration of motor .
- Small size of controller.
- Starting current can be adjusted to small value.
- Harmonics reduction is possible.
- Overall maintenance cost of motor reduces.

VI. EASE OF USE:

- Water pumping system
- Conveyer belts system

VII. CONCLUSION

A simple technique to control the IM electromagnetic torque during soft starting has been presented. Using this technique, the motor torque can be tailored according to the load torque, and the acceleration can be maintained constant over the entire starting period. The proposed strategy eliminates the shaft-torque pulsations during the starting process

REFERENCES

1. Soft Starting of Induction Motor With Torque Control"IEEE PAPER Ademir Nied, Member, IEEE, José de Oliveira, Rafael de Farias Campos, Rogério Pinho Dias, and Luiz Carlos de Souza Marque.

2. IGBT based Induction Motor Soft Starter" Sneha M Mukare (Electrical and Electronics Department, Hirasugar Institute of Technology Nidasoshi ,Karnataka, India)