Home/Office Control through Li-Fi

[1]Prof. Bhavna Thakur, [2]Abhijit Garad, [3]Mandar Parab, [4]Aniket Davane

[1]Professor, [2,3,4]Student
Electronics & Telecommunication
[1]Shivajirao S. Jondhale College of Engineering, Dombivli, India

***Abstract*—The wireless home automation systems are implemented using radio frequency standards which are already congested and are prone to hacking. The proposed system has been designed and implemented to control appliances present in home or office. The proposed system uses Li-Fi for transmission of command signals to control mechanisms for controlling the appliances. In Li-Fi data transmission takes place through turning ON and OFF the LEDs. Since, LED bulbs are present in home and office, the use of Li-Fi will greatly reduce the cost and implementation complexity.**

Index Terms—Li-Fi, Wi-Fi, VLC.

1. INTRODUCTION

A wireless home automation system uses radio frequency technologies like Zigbee, Wi-Fi, Bluetooth, etc. The radio spectrum has already congested and alternatives are being developed to tackle this problem since use of these technologies are increasing day by day. Moreover these wireless technologies are prone to hacking. One solution is using Li-Fi i.e. Light Fidelity, since, it uses visible light for communication and since light is confined within the walls Li-Fi cannot be hacked. Li-Fi is far cheaper than other wireless technologies so by using Li-Fi implementation cost can be reduced drastically. In Li-Fi the data is transmitted by turning ON the LED when data is 1 and turning OFF the LED when data is 0. The transition is done in microseconds so that flickering is not visible to human eyes. Use of Li-Fi is not harmful to human health whereas there are adverse effects to health due the use of microwave technologies. The commands are entered through GUI (Graphical Unit Interface) installed as a mobile application. These commands are transmitted through Li-Fi to turn ON/OFF appliances. State of these appliances can also be monitored through the GUI. The communication through the Li-Fi in the proposed system is full duplex and point to point.

Problem Statement:

Previously, Automation projects has been based on GSM, Bluetooth, and App-to-App. GSM based automation are performed by SMS, Bluetooth automation is performed by range connection and App based automation is performed by App-to-App connection. GSM based automation requires SMS services which costs money. In Bluetooth based automation there is an distance range limitation. In App-to-App based automation, if App is deleted all data is lost.

This project is been done using Li-Fi which is advanced of all three automation. This project saves money on GSM (Text Message Charges), and solves distance range limitation on Bluetooth and App based automation. It also saves energy since only one user can access the home automation.

2. PROPOSED WORK

In the proposed wireless home/office control system there are two transceiver sections. The first transceiver section accepts the commands given through the mobile's GUI and transmit those commands to the second transceiver section. The second transceiver section accept the commands sent through the first transceiver section and control the appliance. The second transceiver section also detects whether the appliance is ON or OFF and sends the signal to the first transceiver section through Li-Fi. The first transceiver section sends the notification signal to the mobile so that user can monitor whether the appliance is ON/OFF through the GUI. ESP8266 Wi-Fi module is used to transmit the command signals through the mobile's GUI to the first transceiver section and also receive the notification signal to allow the user to view the status of the appliance. Thus, the communication takes place between the mobile and the first transceiver section through Wi-Fi.

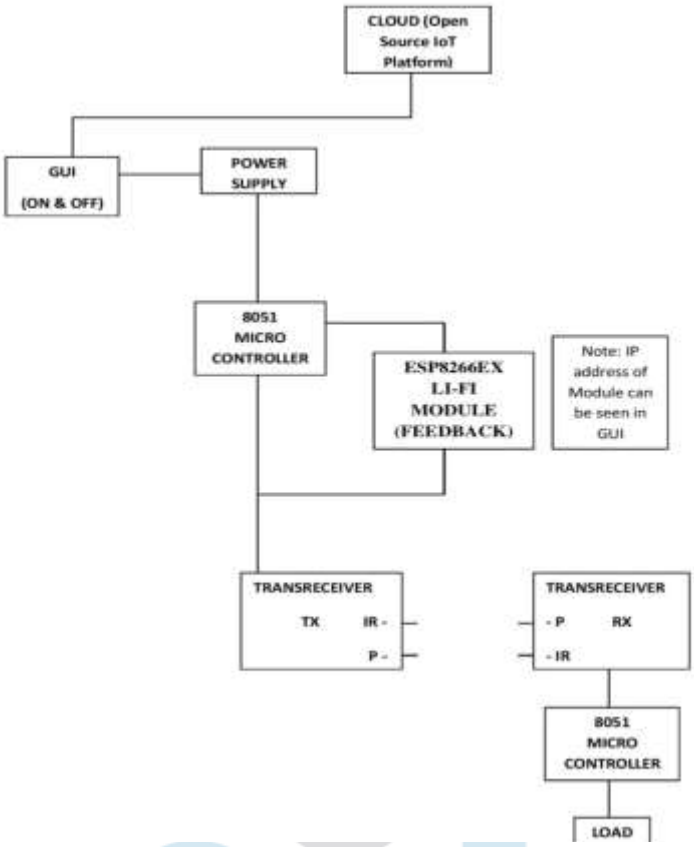

Figure 1: Block Diagram Of home/office control through Li-Fi

2.1 HARDWARE

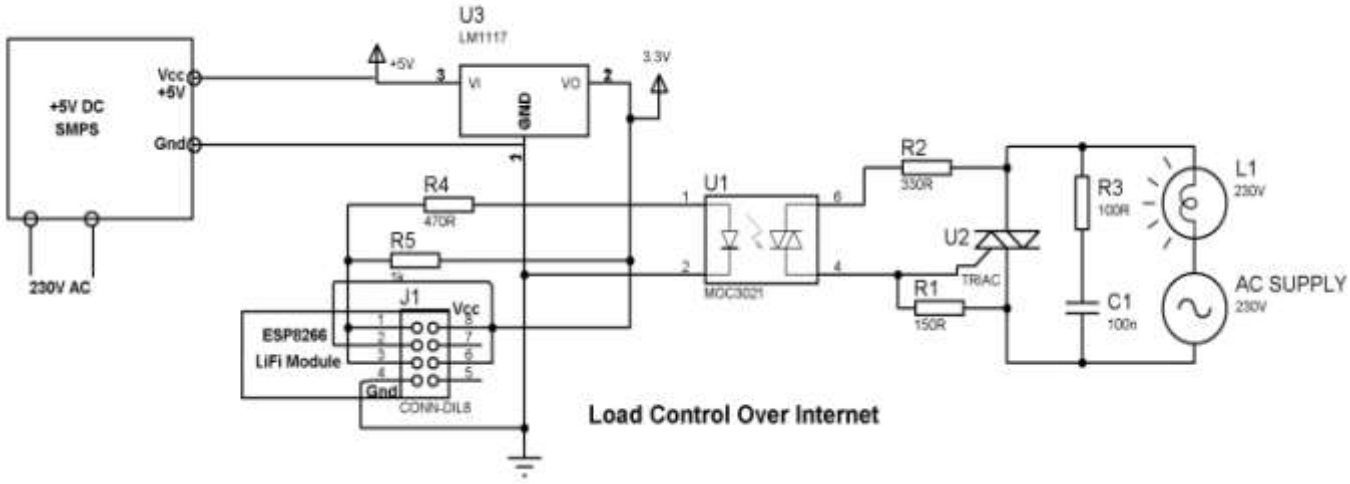

Figure 2: Circuit Diagram of the Home/Office Control through Li-Fi

It is to control electrical load over the Internet from anywhere in the world with a status update on password protected dedicated cloud with all the hardware housed in a supplied compact enclosure of 2" x 2.5" for plug and play home automation. The main purpose of the proposed system is to control any load through the GUI of the mobile. For the real-time load visualization scenario we use cloud with user configurable front end to control and monitor the load. The data sent from a password protected cloud returns commands through allotted IP fed to it. A Li-Fi Module is configured with any nearby wireless modem to access the GUI. The received internet commands are fed to the Li-Fi module. The program within the Li-Fi Module execute the received commands based on which the load gets activated through TRIAC and Opto-Coupler interfaced to Li-Fi Module. The status of the load also will be displayed on the GUI. The power supply consists of 5V SMPS board and 3.3V voltage regulator for a Li-Fi module. 5V SMPS board will give 5V DC out from 230V AC, this we fed to 3.3V voltage regulator which supply power to Li-Fi module and remaining circuit.

2.2 SOFTWARE

EAGLE PCB Design Software: -

The name EAGLE is a short form, which stands for Easily Applicable Graphical Layout Editor. This software offers user friendly and powerful solutions for PCB design, including Schematic Capture, Board Layout and Autorouter. This software is developed by Cadsoft. EAGLE is popular among hobbyists because of its freeware license and rich availability of component libraries on the web. EAGLE has following 2 sections:

- Schematic capture: EAGLE contains a schematic editor, for designing circuit diagrams. Parts can be placed on many sheets and connected together through ports.
- PCB layout: The PCB layout editor allows back annotation to the schematic and auto-routing to automatically connect traces based on the connections defined in the schematic.

KEIL Compiler: -

KEIL provides a broad range of development tools like IDE (Integrated Development environment), Project Manager, Simulator, Debugger, C Cross Compiler. Compilers are programs used to convert a High Level Language source code (written in assembly language or C language) into its object code. Then a linker is used to create an absolute object module suitable for circuit.

3. RESULT

Figure 4: GUI

"ESP 8266 Smart Switch" app which is available on Google Play store. After switching it on we get a network of Lifi module. We connect Li-Fi module and App by entering the User ID and Password given to the module. Once we have connected to the module we have to change the SSID which is "Service Set Identifier". After changing the password we get an acknowledgement .When the smart switch is in 'OFF' state then the light indicating the state in OFF. The bulb is also OFF. When we switch it to 'ON' state then the button indicating glows. Thus indicating that the system in now on. It uses Feedback mechanism to indicate the ON state. As the switch is switched ON the bulb also switches ON. Thus the bulb switching ON and OFF indicates that we are controlling the load with the help of Smart Switch App.

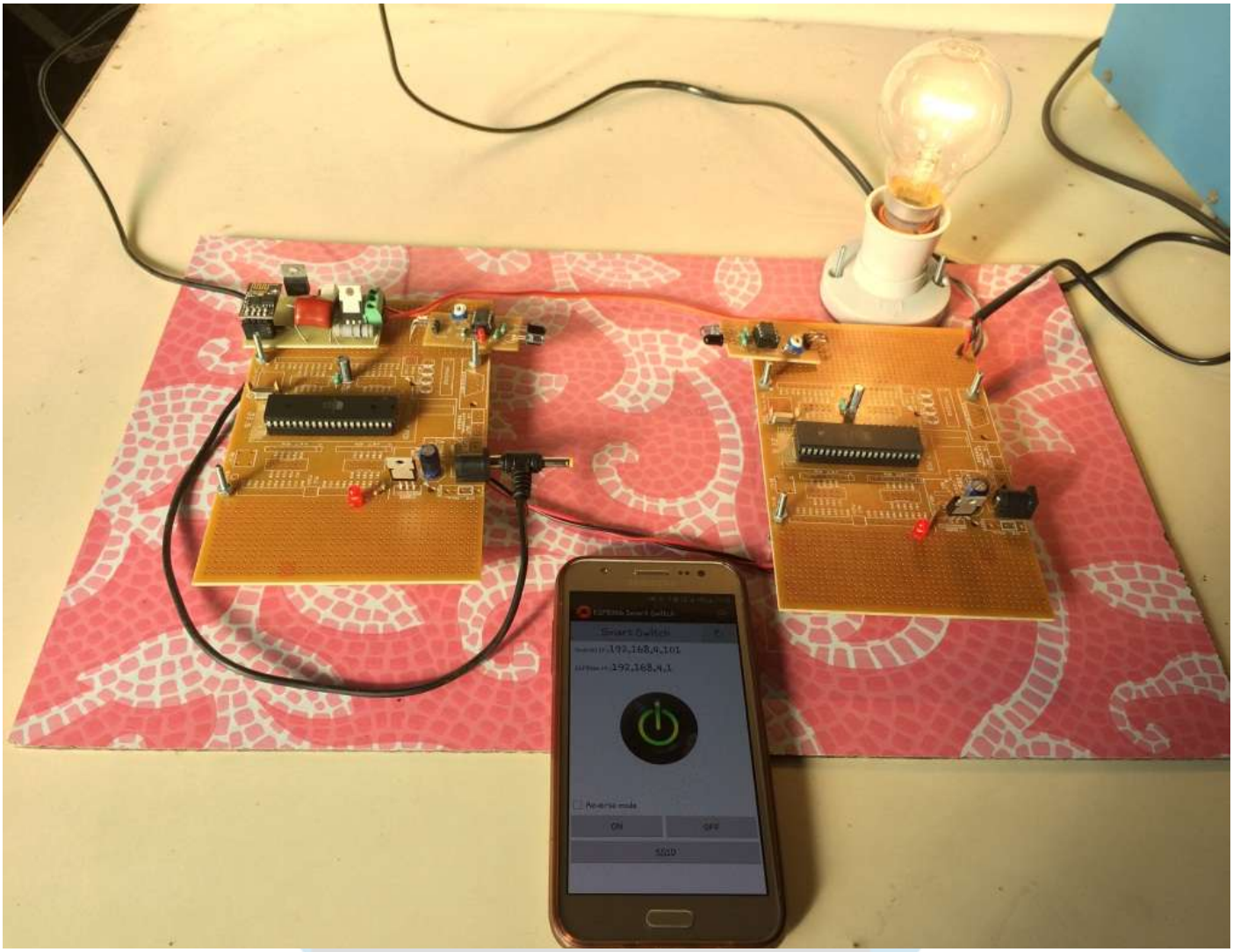

Figure 5: Bulb glows after pressing ON button on the GUI

4. ACKNOWLEDGMENT

The satisfaction and euphoria that accompany the successful completion of any task would be incomplete without the mentioning of the people whose constant guidance and encouragement made it possible. We take pleasure in presenting before you, our project, which is result of studied blend of both research and knowledge. We express our earnest gratitude to our internal guide, Professor Bhavna Thakur, Department of ECE, our project guide, for his constant support, encouragement and guidance. We are grateful for his cooperation and his valuable suggestions. Finally, we express our gratitude to all other members who are involved either directly or indirectly for the completion of this project.

5. CONCLUSION & FUTURE SCOPE

In the proposed system Li-Fi is used as data can be transmitted through the LED bulbs that are present in home and office. So, the implementation of the proposed system is very simple and cheap. The application of IoT can be introduced in the proposed system without any addition of hardware.

REFERENCES

[1] Ahmed ElShafee and Karim Alaa Hamed, Design and Implementation of a Wi-Fi Based Home Automation System, International Journal of Computer, Electrical, Automation, Control and Information Engineering, Vol:6, No:8, 2012.

[2] Neha Aggarwal and Pratishtha Singh, Design and Implementation of Li-Fi based Home Automation System, International Journal of Electrical and Electronics Engineers, IJEEE, Vol. No.6, Issue No. 02, July-Dec., 2014.