Design and manufacturing of flange marking machine

[1]ASMITA DOIPHODE, [2]APARNA TAKAWALE, [3]SHRADDHA YADAV, [4]POOJA BAVISKAR, [5]JAYASHRI NAPHADE

[1,2,3,4]BE Students, [5]Assistant Professor
Mechanical Engineering Department
DIT, Pimpri, Pune-18

***Abstract*: Flange marking machine are power machine which marks the letters in few seconds. The machine works pneumatically. Generally flanges are marked manually. Hence automation is required for better performance, accuracy and optimum process time.**

We are designing and manufacturing flange marking machine. The general outline of our project is designing various parts like cylinder, pressure plate, compound slide etc. in CATIA software and doing analysis of various parts.

***Index Terms*: Flange marking machine, CATIA, Automation, Process time, Accuracy**

I. INTRODUCTION

Various flange marking machines are available in the market based on pneumatic, hydraulic and laser technique.

Aim of project

The aim of this project is to manufacture flange marking machine with optimum design and less cost.

Need of project

Earlier, the flange marking is done manually with the help of punch and hammer which was very time consuming. Hence to minimize time and implement automation in the industry we need such machine.

II. PROBLEM STATEMENT AND NEED OF SIMPLE MARKING MACHINE

The flange marking is essential in manufacturing industry to specify its PCD (pitch circle diameter), Application, Pressure capacity etc. for different application. So, there is need of such technique to make easy to this complication.

Flanges having different PCD's and material. The production of these flanges is on job basis.(At a time 50 to 80 flanges).

Where, the manufacturing is not done on regular basis, it is based on requirement of consumer. Therefore, purchasing of new brand marking machine is not a best option for this case. Because it required more money to spend and having very minimum PAY BACK PERIOD TIME.

Therefore, if possible, there is a need to make such a machine with low cost incurred and simple to operate and at least marked good quality of letters on flange only for company personal used.

III. LITERATURE REVIEW

Industrial flange marking machines are power machines which marks the letter in few seconds. These machines work pneumatically, hydraulically or electromechanically as per the application. The engraving speed of these types of machines is 3-6 character per second and weight of such type of machines is between 60kg to 120 kg and having the marking depth is of 0.01-2 mm.

Flange marking tool is important component in flange marking machine. These multiple tool having letter from A to Z and Numbers from 0 to 9 made from Material E9 or E19 for engraving the require letter or number on flange as per requirement. These material are of high strength and power absorbing capacity which capable to engraving the letters on flange without its failure. Cost is the major problem in purchasing of automated flange marking machine.

N.D. Junnarkar, 'Machine Drawing' [1], states about the basic principles of technical drawing, dimensioning, limit, fits and tolerances and provides details of how to draw and put the machine components together for an assembly drawing. It gives guidelines to select material according to need or application and also gives detailed knowledge of engineering materials and their properties. It also includes basic information about manufacturing process, machine used to carrying out these process and joining processes. It gives information about various modelling software such as AutoCAD, CATIA etc. We used CATIA because CATIA is most popular and low budget CAD software for 3D modelling.

B. K. Agrawal, 'Introduction to Engineering Materials' [2], presents the classification and properties of engineering materials. It explains various types of materials and effect of variable condition on the materials. It also gives standards and

specifications for materials, and procedures for their testing as per Indian condition and practice. We have studied composition and properties of mild steel and carbon steel.

Hardness of the metal and alloys is complex property and depends upon other properties such as grain size, yield strength, tensile strength, work hardening coefficient, resistance to abrasion etc. The hardness is reported by a certain characteristic number. BrinellHardness Test is conducted as per ASTM.These testing machines are widely used in field of research and industries is presented in V. D. Kodgire and S. V. Kodgire, 'Material Science and Metrology'[3]. We have conducted Brinell Hardness Test for calculating BHN, various properties and characteristics of mild steel are studied.

V. B. Bhandari, 'Design of Machine Elements'[4], states the basic procedure of machine design which consist of step-by-step approach from given specifications about the functional requirement of a product to the complete description in the form of drawings of the final product. It also gives us information about various welding processes such as thermite welding, gas welding, and electric arc welding. Among these processes we have selected gas welding process. In gas welding the rate of heating is slow compared to electric arc welding therefore the operator has more control over both heating and cooling rates. Selection of proper colour is an important consideration in product aesthetics. The choice of colour should be compatible with the conventional ideas of the operator. Many different colours are associated with different moods and conditions. We selected green colour as it means safety. The shape and dimensions of the machine elements are decided on the basis of ergonomic studies.

IV. FLANGE MARKING PURPOSE

Flanges are specified by its Pitch circle diameter (PCD).Flange marking is the industrial method to specified flanges for different application purpose. Every standard have clearly requirements for steel flanges making style. Usually the marking word includes;

• Seller's logo
• Buyer's logo
• Standard number
• Flange type
• Flange's pressure
• Flange's material
• Place of origin
• Heat number and other words convenient to trace.

If the flanges repaired by welding, it must mark on flange's showing this flange repaired by welding.
If the flange's dimension (OD, ID, PCD, Thickness, Holes number, Holes diameter, Tolerance etc.) are different with the normal standard, it also mark on flanges where it different with normal once.

Industrial flange marking machine

Industrial flange marking machines are power machines which marks the letter in few seconds. These machines are works on pneumatically, hydraulically or electromechanically as per the application.
The engraving speed of these types of machines is 3-6 character per second. And weight of such type of machines is between 60kg to 120 kg. And having the marking depth is of 0.01-2 mm.These multiple tool having letter from A to Z and Numbers from 0 to 9 made from Material E9 or E19 for engraving the require letter or number on flange as per requirement. These material are of high strength and power absorbing capacity which capable to engraving the letters on flange without its failure.

Cost of industrial marking machines

Cost is the major problem in purchasing of automated flange marking machine.
The cost of such type of machines is minimum Rs.1,50,000 as per application.
So huge investment is required to purchase such type of machines.

Marking standard or marking style

- The Marking Style for European Standards Flanges, DIN, UNI, EN 1092-1 norms etc. (LOGO, EN 1092-1, TYPE 01, PN16, DN80, 88.9, P265GH, HEAT NUMBER, MADE IN CHINA).
- The Marking Style for ANSI, ASME Standards Flanges, ANSI, ASME, (LOGO, ASME B16.5, CLASS 150, SLIP-ON RF, A105, HEAT NUMBER, MADE IN CHINA).
- The Marking Style for JIS, KS norms etc. special with KS Mark. (LOGO, JIS B2220, 5K, 80A, SOP, SF440A, HEAT NUMBER, KS MARK, MADE IN CHINA).
- The Marking Style for BS 4504 norms etc. (LOGO, BS 4504, WELD NECK, PN40, DN80, RSt37.2, HEAT NUMBER, MADE IN CHINA).
- The Marking Style for SABS 1123, SANS 1123 norms etc. (LOGO, SABS 1123, CLASS 4000/3, NB80, A105, HEAT NUMBER, MADE IN CHINA).

V.COMPONENTS OF MACHINE

Flange marking machine table

As per the designed sizes rectangular brackets, plates were cut as per size and desired frame was made by welding process. Top plate is fitted on frame of table. Mountings for pneumatic cylinder are also fabricated as per required arrangement. Necessary arrangements for hinging, lever mounting, FRL unit mountings are also attached to table. Levelling of top plate is also made to avoid misalignment of other connections. This levelling was made by levelling tube.

Male sliding part of pressure plate

This plate manufactured as per the stated dimension design procedure. A plate of 400mmX300mmX80mm was cut from the scrap material. Also machining and surface finishing is done to obtain required dimensions. After that two rails of 20mmX10mm X400mm rectangular cross section were welded to the plate along the length to give sliding movement. Holes for fixing of flange are made as-

- First drilling at the points marked as described in design is done. Drill bit of 14.2mm is used. Drilling is done on drilling machine in workshop.
- Then tapping is done at this drilled hole by using M16 tap set and tap wrench
- Three types of taps are used for threading.
- Course tap, intermediate tap, fine tap of M16.

Female sliding part of pressure plate

Two plate of 400mm*300mm*80mm was cut from the scrap piece. Also machining and surface finishing is done to obtain required dimensions. A slot of 20mm*10mm cross section is made at the centre along the length. Slot is made on milling machine in workshop. Another two plates of 70mm*20mm*400mm are also taken. Three holes of diameter16.5 are drilled on these plates for fixing on table. This plate is connected to first plate in perpendicular direction as stated in design by welding. Now these welded parts are fixed to table as stated in design by nut bolts (M16 bolts).

Fixing of compound slide over table

A compound slide, bought from the market was fixed in perpendicular direction of sliding surface plate. Mounting of compound slide on the table is done by nut bolting arrangement. For connecting sliding part to connecting rod of piston a triangular part was fabricated. This was welded as well as bolted to the plate.

Tool marking box

A bottom plate of 260mm*30mm*37mm was taken from the scrap material and then machining is done over it. On this plate 8mm slot is made on upper side for giving space for marking punches. At the both end sides of plate two drills are done of 16.5mm for fixation purpose. This plate was welded to sliding part of compound slide. Also a top plate of 200mm*20mm*37mm was taken and drilling of 16.5mm is also done to fix it over bottom plate.

Hinge

As stated in design hinge of 500mm length, we have used rectangular hollow bracket of 500mm length as hinge. At 1/3 portion from one end drill of 16.5mm is done to hinge at that point. At two ends two L shaped blocks as specified in design are made by welding.

Disc plates

For transmitting force from cylinder to hinge no direct coupling is done .just a disc is connected at end of piston rod and it is guided inside the arrangement made on hinge. This disc was welded to piston. Diameter of disc is 60mm and of thickness 5mm.Similar disc is fitted at other end to the screw joined to the surface plate.

VI. WORKING OF FLANGE MARKING MACHINE

- Situate the flange on a pressure plate with the help of supporting stud.
- Tool box slides on the compound slide with the help of cylinder2.
- DCV is used for controlling the direction and pressure of cylinders.
- Pressure of cylinder1 is supplied to the hinge for proper alignment of pressure plate.
- By controlling marking pressure of cylinder1 marking is done on the flange

VII. FIGURE AND TABLE

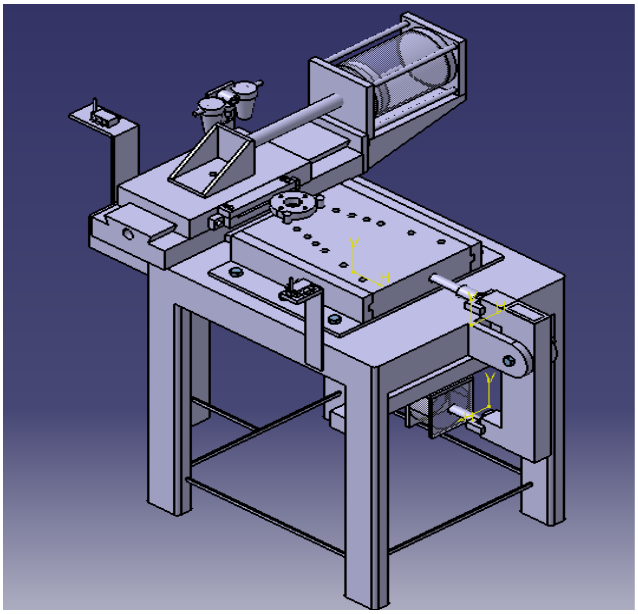

Modelling of machine

Component dimensions

Sr. No.	Components	Dimensions
1	Cylinder 1	D=125mm,Stroke=50mm
2	Cylinder 2	D=150mm, Stroke=200mm
3	Hinge	L=500mm
4	Compound slide	Sliding movement=250mm
5	Pressure plate	400mm*400mm*90mm
6	Table	920mm*585mm*750mm

VIII. CONCLUSION

Considering all the aspects of the components which we have used, we concluded that the design and manufacturing, obtained quality and accuracy of machine is considerable.

So we can say that the machine would be better choice in economic aspects. Also it would be convenient to use. This project would help us to implement the theoretical knowledge of pneumatics, manufacturing processes, material science and design of machine elements.

While designing this machine we could develop our abilities in practical sense. We would get the solution to overcome the problem during designation and implementation of our ideas.

Hence we fulfil the purpose of manufacturing a flange marking machine in minimum cost.

IX.FUTURE SCOPE

Following points can be suggested for the future scope of work,

- Study can be made for reducing cost and increasing accuracy of machine.
- Analysis can be made for fully atomised machine as well as for compact size.

REFERENCES

[1] N.D. Junnarkar , Machine drawing
[2] Agrawal B.K, Introduction to engineering materials,TATA Mc.graw hill publishing co. LTD.
[3] V.D.Kodgire, S.V.Kodgire, Material science and metallurgy for engineers, Everest publishing house.
[4] V.B.Bhandari, Design of machine elements (Third edition).
[5] K.L.Narayana, P.K. Kannaiah, R. venakata reddy, Machine drawing (second edition).
[6] www.Engineeringtoolbox.com
[7] www.forged-flange.com
[8] www.howstuffworks.com/search/flange marking