MODIFIED POWER AND FREE CONVEYOUR

[1]Prof. H.D.Sarode, [2]Gaurav Hadavale, [3]Abhay Adekar, [4]Abhishek Hande, [5]Nilesh Alliwar, [6]Pradip Bhingare

[1]Assistant Professor, [2,3,4,5,6]Students
Department of Mechanical Engineering
P.V.P.I.T., Pune, (India)

***ABSTRACT*: Nowadays there are lots of applications of power and free conveyors in logistics. They are the most frequently used conveyor systems worldwide. Overhead conveyor technologies like power and free systems are used in the most intra-logistics applications in trade and industry. The automotive, food, beverage and textile industry as well as aeronautic catering or engineering are among the applications. Power and free systems employ different manufacturing intervals in manufacturing as well as in production as temporary store and buffer. Depending on the application area, power and free conveyors are equipped with target controls enabling complex distribution-and sorting tasks. This article introduces a new power and free conveyor design in intra-logistics and explains its components. According to the explanation of the components, a model is created by means of their technical characteristics. Through the CAD software, the model is visualized. After that, the static analysis is evaluated. This analysis helps the calculation of the mandatory state of structures under force action. This powerful model helps companies achieve lower development costs as well as quicker market maturity.**

***Keywords*: productivity improvement, Intra-logistics, material flow, power and free conveyor, motion and time study analysis.**

INTRODUCTION

The manual overhead truck is the simplest and oldest conveyor technology. Trolleys are running in amsrail profile, which are manually displaceable and able to carry loads with different geometries and weights. Main area of use is the flexible connections of individual processing areas, which are not chained automatically as a rule. The process happens manually . The transport way is usually horizontal, larger increases and slopes can only be managed by driven means.

Power and free conveyors consist of a slide section and a chain for the carrying and continuance of the transport goods. The chain, often a gimbal link chain, runs in a hollow rail profile of the carrier and guide rail. Power and free conveyors serve the constant, automatic transport of piece goods. Their feasible path length depends on the weight of the transported material, the admissible chain force of the chain and on the number of drives. Within these boundaries, every desired path length is possible. Power and free conveyors make an enforced inter-linkage of process areas possible, which are driven through continuously, in a clocked manner or with adjustable speeds .

LITERATURE REVIEW

According to Eisenmannthey working on “The flower mounted power and free system has been developed in order to flexibility transport large workpiece in the coating technology plant.To improve productivity by using & design a fixture in large scale industry”. The purpose of this research is to improve production capabilities for large as well assmall scale industry and this research focused on the company. This research used work study technique to improve work process in company, and the research objectives towards accomplished this study is to identify problems in the production work process and improved it in terms of production time, number of process and production rate by proposing an efficient work process to company. This research used systematic observation, flow process and stopwatch time study as research methodology. Catiasoftware used for model testing and develop new model. They concluded that the improvement of work process was executed by eliminating and combining of work process, which reduces production time, number of process and space utilization.

METHOD STUDY

Method Study is the first of the two main divisions of method and study and concerned with the way in which work is done. Method study is essentially used for finding better ways of doing work. It is a technique for cost reduction. The philosophy of method study is that 'there is always a better way of doing a job' and the tools of method study are designed to systematically arrive at this better way of doing a job. Method Study is a technique for improving the efficiency of every type of work, ranging from that of complete factories to the simplest manual movements used in mass production.

METHOD STUDY PROCEDURE

This procedure involves seven basic steps as follows:
SELECT: the work to be studied
RECORD: all the relevant facts about the present method
EXAMINE: the facts critically and in ordered sequences, using the techniques best suited to the purpose.
DEVELOP: the most practical, economic and effective method having due regard to all contingent circumstances.
DEFINE: the new method so that it can always be identified
INSTALL: The method as standard practice

MAINTAIN: the method by regular routine checks.

PROCESS FLOW

The process flow of existing process for the trolly of power and free conveyour is mentioned as follows.

1)DESIGN PROCESS:

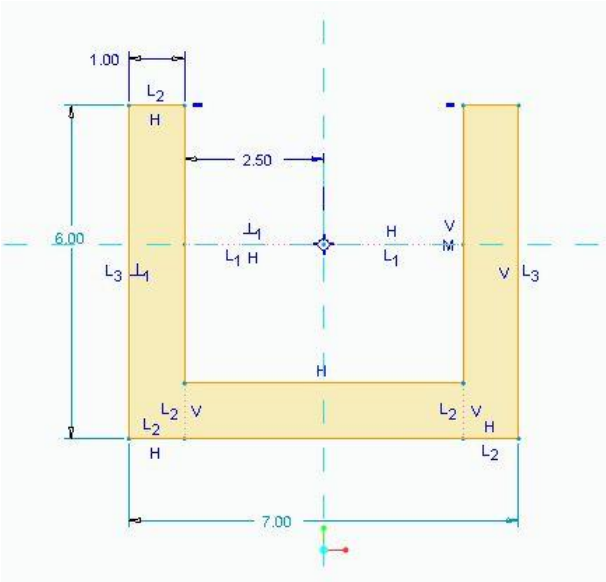

1)Design of trolly.

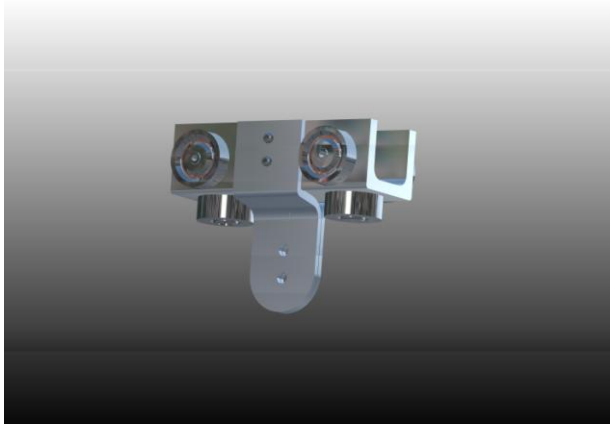

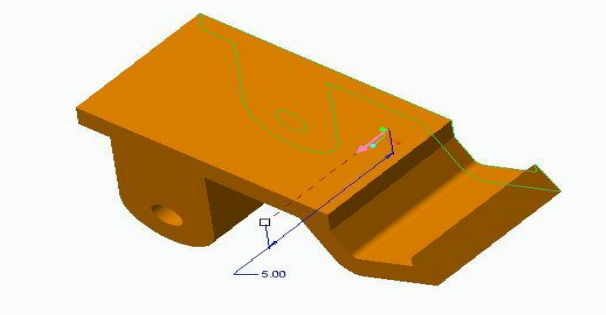

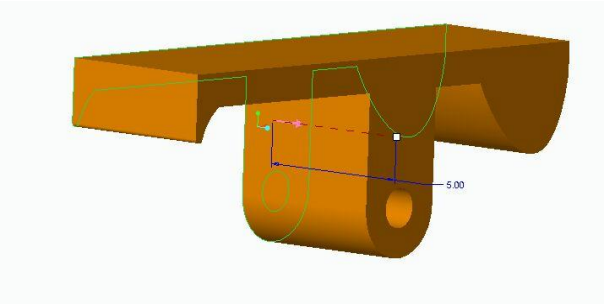

2) Design of dogs

CONCLUSION

Demands to power and free conveyors in industry have grown constantly. Power and free conveyors represent highest movement flexibility in the most limited space . The robust technology and the high degree of flexibility secure an optimal procedure and guarantee the article and target oriented material flow in any company. Power and free conveyors can be adjusted to any individual need of carrier ability and conveyor speed and can be combined with other systems. This inexpensive alternative is used with facilities with low piece goods or with lighter loads. Substantial advantages of this system are freely selectable loading and acceptance points, accumulators, different transport speeds, a continuous material flow as well as the realization of different procedures by bar codes of every single transport unit.

REFERANCE

[1] Eisenmann, Power & Free Conveyor , 2010, pp. 1-11.

[2] D. Arnold, K. Furmans, “Materialfluss in Logistiksysteme” Berlin: Springer, 2009, pp. 27-36.

[3] S. Kummer, H.J. Schramm,I, Sudy, “Internationales Transport-und Logistikmanagement, ” UTB Verlag, 2009, pp. 12-36.

[4] D. Arnold, H. Isermann, A. Kuhn, H. Tempelmeier and K. Furmans, HandbuchLogistik. Berlin: Springer, 2008.

[5] H.D. Haasis, “Produktions- und Logistikmanagement,” BetriebswirtschaftlicherVerlagGabler, 2008, pp. 23-53.

[6] C. Engelhardt-Nowitzki, A.F. Oberhofer,“Innovationenfür die Logistik. WettbewerbsvorteiledurchneueKonzept,” Berlin: Schmidt (Erich) Verlag, 2006, pp. 31-40.

[7] Günter Ullrich, “FahrerloseTransportsysteme. EineFibel-mit Praxisanwendungen.zurTechnik-für die Planung,” Vieweg&TeubnerVerlag, 2010, pp. 44-51.