EMBEDDED BASED VEHICLE SPEED MODERATION AND COLLISIONLESS SYSTEM

[1]Shwetha, [2]Shilpa, [3]Sushma, [4]Sushmitha. M, [5]Chetan.R

[1,2,3,4]Students, [5]Professor
Department of ECE,
SMVITM College of Engineering, Udupi, Karnataka, India

***Abstract*: Nowadays collision between the vehicles is quite evident due to the increase in the number of vehicles. The objective of this paper titled "Embedded based vehicle speed moderation and collisionless system" is to develop a system that automatically moderate the speed of vehicle and avoid accident whenever an obstacle is detected using ultrasonic sensor. It includes functions like obstacle detection, speed moderation and halt before collision. It requires ultrasonic sensors, Bluetooth module, Dc motor, motor driver IC, and temperature sensor, fuel sensor. It is an application development system based on arduino Uno. The key feature is that we can access the system through smart mobiles as well as PC or laptops using Bluetooth technology. In order to prevent the accidents and keep a safe distance between the vehicles automatic speed moderation is introduced, where ultrasonic sensor are used to detect the obstacle, measure the distance and moderate the speed automatically .Ultrasonic sensor HC SR04 is used for short range measurement ranging from 2cm to 400cm. it sends 8 cycle burst of ultrasound at 40 kHz and determines the distance of the object using the time interval required to reflect the ultrasonic sound, and accordingly speed of the vehicle is moderated in three stages. As an add-on feature like fuel level detection, temperature monitoring systems are designed and implemented. Temperature sensor LM35 is used to measure the temperature of engine and prevent engine from overheating.**

***Keywords*--MIT (Massachusetts Institute of Technology), SDC (Smart Display and Control), IDE (Integrated Development Environment), SPP (Serial Port Protocol)**

I. INTRODUCTION

In order to avoid the collision we have proposed "Embedded based vehicle speed moderation and collisionless system". It includes functions like obstacle detection, speed moderation and halt before collision. It requires ultrasonic sensors, Bluetooth module, Dc motor, motor driver IC. It is an application development system based on arduino Uno. The key feature is that we can access the system through smart mobiles as well as PC or laptops using Bluetooth technology. In order to avoid collision and keep a safe distance between the vehicles automatic speed moderation is introduced. Here Ultrasonic sensors are mounted on the front side of vehicle, which is used to detect the obstacle and moderate the speed accordingly. Ultrasonic sensor HC SR04 can detect the obstacle ranges from 2cm to 400cm. The hardware part comprises of interfacing of Ultrasonic sensor with arduino and HC-05 module is an easy to use Bluetooth SPP module, designed for transparent wireless serial connection setup. Bluetooth operates at frequencies between 2400 MHz and 2483.5 MHz (including guard bands) and this technology has a bi-directional communication between the car system and service tools.

II. LITERATURE REVIEW

The GMR Magnetic Field Gradient Sensors located on the pavement of a highway or fast road. This system works only if the vehicle moves above sensor located at the ground. Using this we can only monitor the speed of the vehicle but cannot control it. As a vehicle passes above the board, in a constant magnetic field presence, it disturbs the field. GMR sensors can detect the change in the earth's field due to the vehicle disturbance in many types of applications [1].In order to alert the drivers and to control their vehicle speed, RF technology is being used. A Smart Display & Controller (SDC) meant for vehicle's speed control and monitoring of zones is designed which can run on an embedded system. The vehicle's embedded unit automatically alerts the driver, to reduce the speed according to zones, it waits for few seconds, and otherwise vehicle's SDC unit automatically reduces the speed. The transmitter is to be fixed to the top of the pole at the locations where speed of the automobile needs to be controlled as shown in fig. By using this system we can control the speed of the vehicle only at the zones where RF transmitter is placed. [2] To automatically control the speed of vehicles at speed restricted areas. The RFID Tag is used. These tags are programmed to send a coded signal when the reader comes in proximity. The RFID tags are placed at the beginning and the end of the regions for which the speed should be reduced. When the reader comes in the speed limit area, speed is controlled automatically. The main disadvantage of this system is that RFID tags must be placed in the areas where the speed is to be controlled. [3].

III. METHODOLOGY

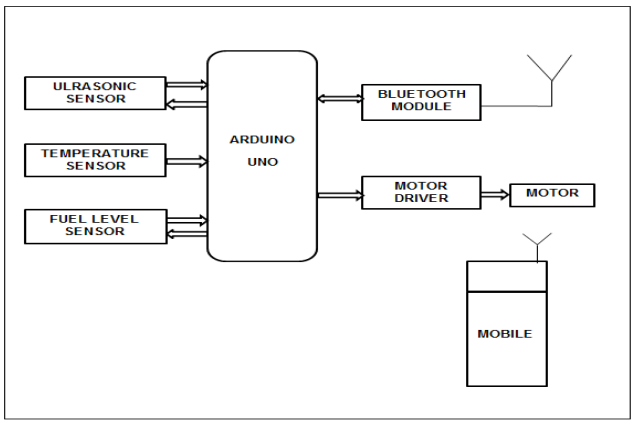

Fig.3.1 Block diagram

As shown in Fig3.1 Arduino is connected to the various sensors. The parameter to be monitored is sensed using respective sensors and data is fed into the arduino. To achieve the collision avoidance it is provided with ultrasonic sensor. The system consists of an electronic speed controller that takes in a logic level control signal and drives the DC motor accordingly. In addition to this, engine temperature is monitored using temperature sensor and fuel level is detected using fuel level detector. Bluetooth module is used for monitoring and controlling purpose.

IV. WORKING

The robot is made up of an arduino board, motor driver, DC motors, Bluetooth module HC-05 & Ultrasonic sensor. Ultrasonic ranging and detecting devices use high frequency sound waves called ultrasonic waves are to detect presence of an object and its range. The system sends ultrasonic waves, if any obstacle is detected waves reflect back. Arduino triggers those waves on the trigger pin and then waits for the echo signal. After receiving the signal, it calculates the distance base on the time spent waiting for the wave to come back and this distance is measured in cm. In addition to this temperature and fuel level is measured. The LM35 series are precision integrated-circuit temperature sensors, whose output voltage is linearly proportional to the Celsius (Centigrade) temperature. The LM35 does not require any external calibration or trimming to provide typical accuracies of ±1⁄4˚C at room temperature and ±3⁄4˚C over a full −55 to +150˚C temperature range. The liquid level sensor has 3 pins. Two of the pins are for power, one connecting to the +5V of the arduino and the other connecting to the ground terminal of the arduino. The pin that outputs the analog voltage signal in proportion to the amount of the sensor which is covered with liquid. This pin connects to an analog pin on the arduino board to be read, and output is displayed on the Smartphone screen.

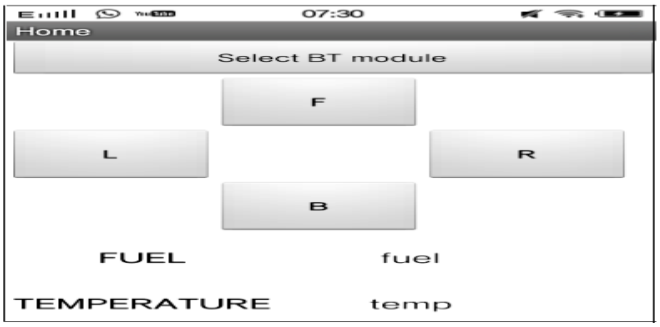

Fig.4.1 Home page of “Car” App

The android mobile user has to install an application ‘Car’ app. Then user needs to turn on the Bluetooth in the mobile. The wireless communication techniques used to control the robot is implemented by using the Bluetooth technology. User can use various commands like move forward, backward, left, and right. These commands are sent from the android mobile to the Bluetooth receiver. Embedded Based Vehicle Control System has a Bluetooth receiver unit which receives the commands and give it to the Arduino to control the motors. The Arduino then transmits the signal to the motor driver IC to operate the motors. The motor driver has several pins and those pins are for power supply, ground, and each dc motor have its own respective pins. The data from the android app is sent as an input to the Bluetooth module which further gives it to the Arduino Uno, Uno is a controller which controls the signals and performs the assigned functions it understands which signals have to be forwarded to the motor driver so that it moves in particular direction. Like, if the user has tapped the left (L) button on the app the Arduino will send the signal to the motor driver to activate the left pins and accordingly move the motors so that the wheels can follow the direction. Simultaneously temperature and fuel level is displayed on the screen.

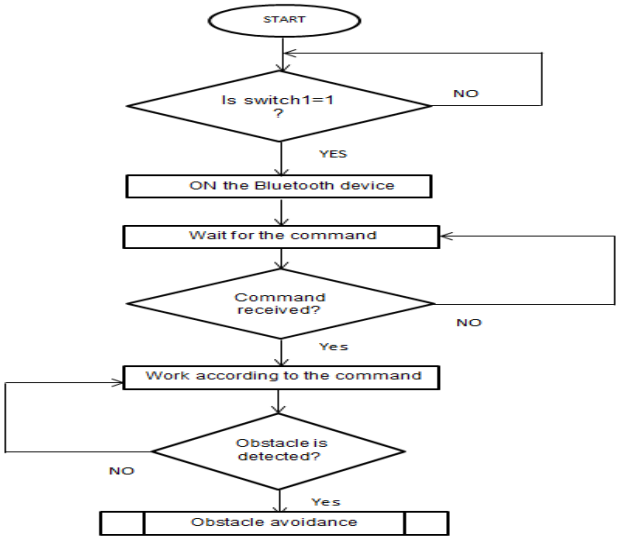

Fig.4.2 Manual mode of operation

Fig.4.2 shows manual mode of operation .This operation occurs when switch1 is activated. At the beginning Bluetooth device need to be turn on. After pairing of smart phone with the system Bluetooth device, depending on the command received by the Bluetooth from the smart phone vehicle system moves. While moving forward obstacle detection will be done by using ultrasonic sensor. Depending on the distance in between the obstacle to the vehicle speed get reduced. Fig.4.3 shows automatic mode of operation will occur when both the switches are activated. In this mode vehicle will be moving in high speed, whenever the obstacle detected in forward direction vehicle speed gradually reduces automatically depending on the distance in between obstacle and vehicle... When obstacle detected in closer range the vehicle is automatically stops and wait for obstacle to move, if not then vehicle will turns towards its the left by checking the presence of obstacle. Presence of obstacle is checked using ultrasonic sensor. Depending on the distance in between the obstacle to the vehicle speed get reduced.

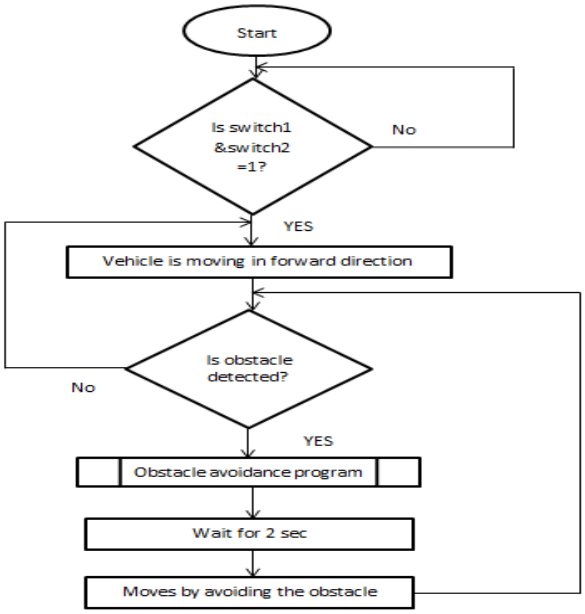

Fig.4.3 Automatic mode of operation

Movement can be controlled by using smart phone. A Bluetooth device is used to monitor the phone by sending characters in 2.483GHz frequency. Car App is created for this purpose. Fig 4.4 shows the final robot.

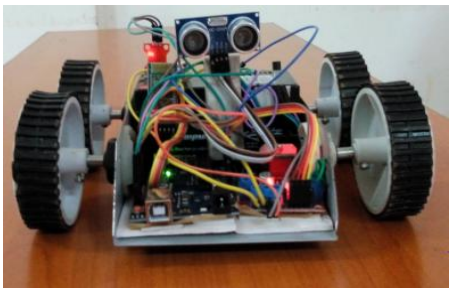

Fig.4.4 Front view

SL No.	Obstacle at different distances	Vehicle Speed
1	Without Obstacle	250 RPM (full speed)
2	With obstacle at distance 150cm to 250cm	150 RPM
3	With obstacle at distance 50cm to 150cm	100 RPM
4	With obstacle at distance 20cm to 50cm	50 RPM
5	With obstacle at distance less than 20cm	Halt or 0 RPM

Table 4.1 Result Analysis

V. Conclusions

The "Embedded based vehicle speed moderation and collisionless system" to perform the speed reduction of vehicle depending on the distance between the obstacle and vehicle is achieved. Speed reduces depends on the output obtained from the ultrasonic sensor which ranges to 4m.In addition to real time monitoring of temperature and fuel level is possible. Temperature monitoring is done by using LM-35 sensor and Fuel level is monitored using fuel level sensor. The system is controlled by an android application, the connectivity between the system and android Smartphone app is done through HC-05 Bluetooth. Hence this system achieves its objective to control the speed of any vehicle whenever an obstacle is detected and avoid collision.

Acknowledgment

We are thankful to Management of Shri Madhwa Vadiraja Institute of Technology and Management and all our faculty members of E&C Department for their encouragement and whole hearted cooperation. We would like to thank Prof.Chetan R for his guidance and valuable Suggestions time to time. We would like to express Profuse thanks to all for their support during this work.

REFERENCES

[1] J.Pelegri, J. Alberola, V. Llario Escola Pol. Sup. Gandia "Vehicle Detection and Car Speed Monitoring System using GMR Magnetic Sensors" IEEE Conference Publications,2012.
[2] Ni Guoqi Liu ,Changman Guan ,Yongjun Wang ,Mansheng " Car CollisionPrevention Radar System".
[3] Young-Hun Song, Suk Lee " Fuzzy Inference-based Low-Speed, Close-Range Collision-Warning Algorithm for Intelligent Vehicle" IEEE Conference Publications,2012.
[4] Leena Thomas1, Swetha Annu James2, Seril Joseph3, Arya K B4, Tedik Narah5, Obang Pangu6 "Automatic Speed Control of Vehicles Using RFID" International Journal of Engineering and Innovative Technology (IJEIT) Volume 3, Issue 11, May 2014 .
[5] Manjunath Chincholi1, Dr K.Chandrashekara2 "Design & Analysis of Vehicle Speed Control Unit Using RF Technology" International Advanced Research Journal in Science, Engineering and Technology Vol. 2, Issue 8, August 2015.
[6] Surbhi Verma, "Android App Controlled Bluetooth Robot" International Journal of Computer Applications Volume 152 – No.9, October 2016.