REVIEW ON SIX STROKE ENGINE
(REDUCING SUCTION LOSSES IN SIX STROKE ENGINE)

[1]Prof.K.A.Tapre, [2]Rohir Rade, [3]Sachin Suryvanshi, [4]Sadik Sutar, [5]Vipul Wani

[1]Assistant Professor, [2,3,4,5]UG Students
Department of Mechanical Engineering
PVPIT, BAVDHAN, PUNE, MAHARASHTRA, INDIA

***Abstract*— The modern four stroke internal combustion engine has been widely applied due to excellent power to weight ratio and reliability. However, the major downside of the even most efficient modern 4 stroke engine is the production of significant amounts of excess heat energy, dissipated though the cylinder walls of the engine and expelled as waste energy during the exhaust stroke of the cycle. The development of a more efficient six stroke internal combustion engine for increasing the efficiency of four stroke engine for that the final two strokes designed to use of exhaust and convert it into power stroke and finally six stroke working as exhaust stroke and also batter scavenging. Some of basic modifications are done in four stroke engine and made a six stroke engine we can increase the brake thermal efficiency of the engine. Also the dramatic reduction in pollution and batter scavenging is occurs.**

Index Terms—Four stroke engine, Combustion, Exhaust gases, Efficiency

I. INTRODUCTION

As the time passes, it is believed that the petroleum products and crude oil will be not enough and will be costly. Various researches are going on for the improvement of fuel economy of engines. However, as the demand and availability for petrol and diesel is somewhat unbalanced and there is a need to balance since that is mainly happened due to enormous increase in number of vehicles. If the same situation continues then the scenario will be more disastrous and petrol and diesel will be costlier and limited. With increased use and the depletion of fossil fuels, today more emphasis is given on the alternate fuels.

1.1 OBJECTIVE

- Reduction in fuel consumption
- Dramatic reduction in pollution
- Better scavenging and more extraction of work per cycle

1.2 PREVIOUS WORK

In six stroke engine, there are additional two strokes, namely another power and exhaust strokes. The engine works through harnessing wasted heat energy created by the fuel combustion. After the combustion stage water is injected into the superheated cylinder. The water explodes into steam and force the piston down. It in turn helps to cool the engine. That resulted in normal levels of power but using much less fuel. It also has the advantage of not requiring an external cooling system. In order to achieve these benefits, major modifications of conventional internal combustion engine must be done.

II.ABOUT SIX STROKE ENGINE

To further the study of six stroke engine in short-term, unconventional solutions, a one cylinder, four- cycle, four valve internal combustion engine has been modified with the goal of higher efficiency. A four stroke engine has been modified to a six stroke engine by adding an exhaust cycle, such that the engine

(1) Intakes
(2) Compresses
(3) Combusts,
(4) Exhausts,
(5) Injects Exhaust gases
(6) Re-exhaust

III.WORKING OF SIX STROKE ENGINE

Six Strokes engine has consisted of the six processes in a complete cycle such as four stroke engine consist only four process in a complete cycle. These six processes are as

3.1 FIRST STROKE (SUCTION STROKE)

During the first stroke the Inlet valves opens and air- fuel mixture from carburettor is sucked into the cylinder through the inlet valve and piston moves from TDC to BDC.

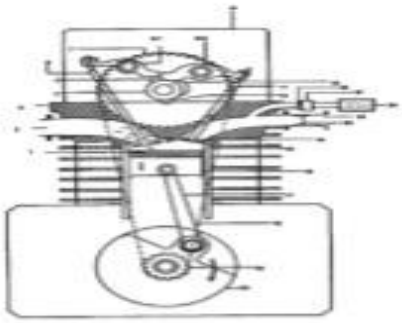

Figure No.1 Suction stroke

3.2 SECOND STROKE (COMPRESSION STROKE)

During the second stroke, piston moves from BDC to TDC. Both the inlet valve and exhaust valves are closed and the air- fuel mixture is compressed.

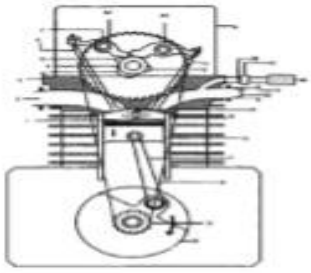

Figure No.2 Compression stroke

3.3 THIRD STROKE (FIRST POWER STROKE)

During the third stroke, power is obtained from the engine by igniting the compressed air- fuel mixture using a spark plug. Both valves remain closed. Piston moves from TDC to BDC.

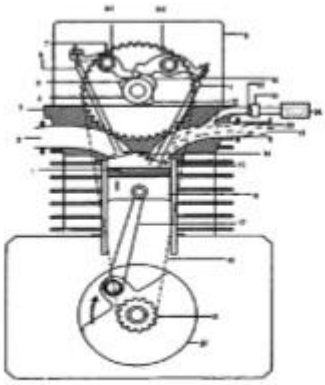

Figure No.3 First Power Stroke

3.4 FOURTH STROKE (EXHAUST STROKE)

During the fourth stroke, the exhaust valve opens to remove the burned gases from the engine cylinder. Piston moves from BDC to TDC.

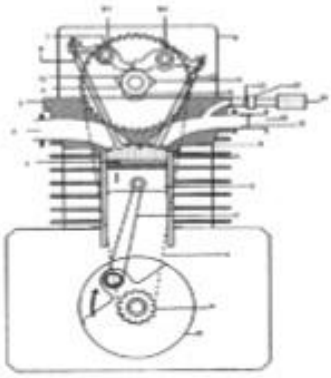

Figure No.4 First Exhaust Stroke

3.5 FIFTH STROKE (SECOND POWER STROKE)

During fifth stroke we have to admitted 10 to 15% exhaust gases into cylinder with the unburnt gases the final and second power stroke is completed and piston moves from TDC to BDC.

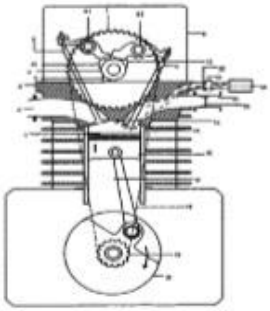

Figure No.5 Second Power Stroke

3.6 SIXTH STROKE (SECOND EXHAUST STROKE)

During the sixth stroke, the water exhaust valves remain open. The water sucked into the cylinder during the fifth stroke is removed to the atmosphere through the water exhaust valve. Piston moves from BDC to TDC and six stroke is completed.

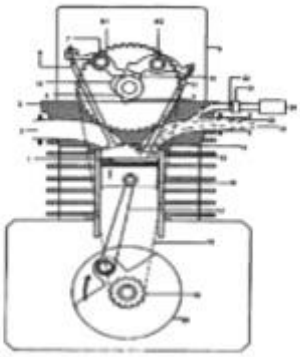

Figure No.6 Second Exhaust Stroke

These are the process that may be repeated again & again and the engine start working with the high amount of power and torque production with less fuel consumption. The six stroke engine may be further work in the otto and duel cycle. In a six stroke engine the energy absorption is less because of slower acceleration of reciprocating parts The piston speed of the upper piston is about a quarter of the main piston; therefore, its service life should be at least twice that of the main piston.

IV.METHODOLOGY OF SIX STROKE ENGINE

We have to use four stroke four valve engine for modification in six stroke cylinder engine. The engine has four valve two valve for inlet and two valve for exhaust purpose.

In conventional four stroke engine two valves together use for inlet and exhaust. So we have to separate each valve by giving partion in valve bodies. Then we are connecting all ports by inlet and exhaust manifolds.

We are joining all ports such like that first port is used as inlet for mixture of petrol and air. Then first suction and power stroke is completed. And when exhaust stroke takes place exhaust gases are exhausted from first exhaust port. After exhaust port we placing one bypass device which allows some exhaust gases are used (10-15%) again and some gases are exhausted. These

exhaust port is connected to second inlet port using manifolds for fifth stroke these gases are used and after completing final exhaust stroke these gases are thrown back to exhaust port.
Using these methodology suction losses inn six stroke engine are minimized and efficiency of engine increased.

V.MODIFICATION IN THE ENGINE

The following modification are necessary in six stroke engine

5.1 CAMSHAFT MODIFICATIONS

In the six stroke engine the 360 degree of the cam has been divided into 60 degrees among the six stroke. The exhaust cam has 2 lobes to open the exhaust valve at fourth stroke (first exhaust stroke) and at the sixth stroke to push out the exhaust gases

Figure No.7 Cam Shaft

5.2 CRANKSHAFT TO CAMSHAFT RATIO MODIFICATION

In conventional four stroke engine, the gear at crankshaft must rotates 720. while the camshaft rotates 360 to complete on cycle for six stroke engine, the gear at the crankshaft must rotates 1080 to rotates the camshaft 360 and complete one cycle. Hence their corresponding gear ratio 3:1

Figure no.8 Timing Gear

5.3 CAM FOLLOWER MODIFICATION

The bottom of shape of regular follower has the flat pattern, which is suitable with the normal camshaft for four stroke engine. When reducing the Duration of valve opening from 9000 to only 6000 the shape of the follower must be changed from flat to roller or spherical shape.

Figure No.9 Cam Follower

5.4. Modification in Inlet And Exhaust Manifold:

In given four stroke engine there is common inlet manifold through which required quantity of fresh charge from atmospheric air is sucked due to movement of piston and vacuum creation and mixed with the fuel for proper combustion The common inlet manifold of four-stroke engine parted by welding a plate between the common inlet manifold. The plate welded between the inlet manifold is of aluminium. Because manifold is made of aluminium. The main benefit of this manifold is exhaust gases come out at high temperature so it will preheat the inlet air so increase the combustion rate.

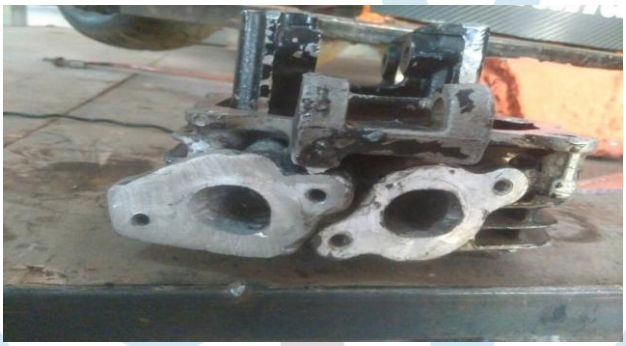

Figure No.9 Exhaust and Inlet Manifold

VI.ADVANTAGES OF SIX STROKE ENGINE

1. Thermal efficiency reaching 50%.
2. Fuel consumption reduced by more than 40%.
3. Reduction of chemical, noise and thermal pollution.
4. Two expansion (work) through six stroke.

VII.CONCLUSION

The six stroke engine modification promises dramatic reduction of pollution and fuel consumption of an internal combustion engine. Its adoption by the automobile industry would have a tremendous impact on the environment and world economy, assuming up to 40% eduction in the fuel consumption and 60% to 90% in polluting emissions, depending on the type of fuel being used and the second piston replaces the valve mechanism of a conventional engine and also it increases the compression ratio

REFERENCES

[1] George Marchetti and Gilles Saint-Hilaire "A Six-Stroke, High- Efficiency Quasiturbine Concept Engine with Distinct, Thermally-Insulated Compression and Expansion Components." (September-2005)

[2] Mr.KrishnaKanth, Mr.Shinivas. D. "Six Stroke Engine" (0109), www.Jntuworld.com

[3]James Conklin, James P."A highlyefficient six stroke internal combustion engine cycle with water injection for in-cylinder exhaustheatrecovry" Energy 35 (2010) 1658-1664

[4] M.M.Gasim, L.G.Chui, K.A.Bin Anwar " Six Stroke Engine Arrangement" Proceedings of the 15th Int. AMME Conference, 29-31 May, 2012

[5] Amit Bhatia, Ashish Mendiratta, MayankVaish "six stroke engine" (0109) www. Jntuworld.com

[6] ChinmayeeKarmalkar, VivekRaut "Analysing the implementation of six stroke engine in a hybridcar". (January 10,2014)