Beverage System Plant Using PLC and SCADA

[1]Dadmode Pooja, [2]Kalsekar Manjiri, [3]Bhosale Madhuri, [4]Chavan Shivanjali, [5]Prof. Joshi Kunal

Department of Electrical Engineering
Zeal College of Engineering and Research, Narhe, Pune

***Abstract*— In today's modernized industrial world, competition between companies is growing tremendously consumers of this era not just see the quality of product, but its cost and in time delivery. In order to achieve timely delivery of product with better quality automation becomes an inspirable part automation have made its impact in all over industrial as well as commercial and domestic environment. A system containing "Beverage plant using programmable logic controller (PLC) and monitored through supervisory control and data acquisition (SCADA) "is proposed in the paper.The aim of this paper is to design, build, and testing of real time implementation of PLC, SCADA system for ratio control based bottle filling plant. This system will provide low operating cost, low power consumption and high accuracy and reliability to the system and accurate volume of liquid in bottle by saving operating time.**

***Keywords*: - Beverage, PLC, SCADA**

I. INTRODUCTION

Beverage Company needs large quality of production due to increase in market demand with better quality and efficiency. Continuing with the older technology will increase the operating cost, maintenance cost and also the time required for production. This will definitely not satisfy. The today's consumers demand, therefore this gave rise to the need of automatic system which will have higher efficiency, flexibility, lower cost and higher speed so that it will remain stable in this competitive world.

Today's automation used in every industrial and many other application such loading, sorting of material. According to different qualities shifting the material in various application point and also transferring the material from one place to another place for saving time, cost, labour work, and do not cause any damage to the material while shifting or sorting the material.

In small beverage plant, micro- controller programming is used for working of beverage plant .but, this technique cannot be used for large industrial due to its limitation.

Though PLC have high cost rate, they found to be reliable for large bottle filling and mixing plant, as these industries a quite big and run on large scale, observation and control on each section is not possible .Therefore the system called supervisory control and data acquisition system is introduced this system gives us the advantage observing and controlling the whole system through a mall control room.

This paper mainly divided into four parts:

1. **Tank level control**
2. **Filling Process**
3. **Ladder logic**
4. **SCADA/ HMI**
5. **Conclusion.**

II. BLOCK DIAGRAM

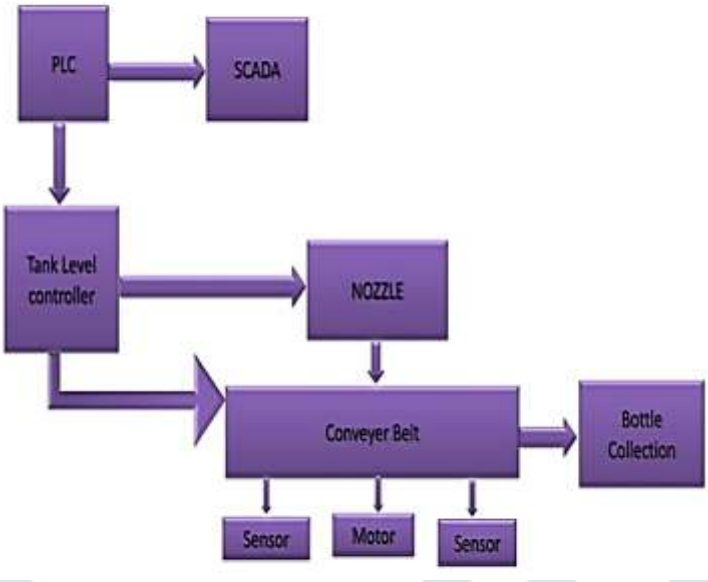

1.1 BLOCK DIAGAM OF PROCESS

III. SYSTEM CONTROL

This project is complete representation of automation using PLC and SCADA application. Through ladder logic in PLC, whole system is programmed the system undergoes changes or these is a scope for future changes, we just have to make changes I programmable accordingly.

1) Tank level control:

In this project there are mainly three tanks: Tank A, Tank B, and main Tank.

Tank A and Tank B have different liquid which would get mixed in main tank. after the drain out of Tank A&B.Similarly the main tank also have high and low level liquid sensor.

The tank A & B are filled with external reservoir. The outlet of tank is where the liquid gets mixed and goes to the filling system.

2) Filling process:

In this part, the important equipment is conveyer system and sensor .At set time the conveyor start and the value get open. A sensor is devices which accept the input signal, and gives the output accordingly. In this we have use three sensor, one sensor is located at starting at conveyer belt, second sensor is located at the middle at conveyer belt exact below the nozzle, and third sensor is located at the end of the belt.

First sensor will detect the bottle at the start ,second sensor will detect the bottle at the middle right down the nozzle and the conveyer stops and when bottle is filled the conveyer starts again. When it reaches the end at the conveyer belt, third sensor will detect the filled bottle and conveyer will stop.

IV. LADDER LOGIC

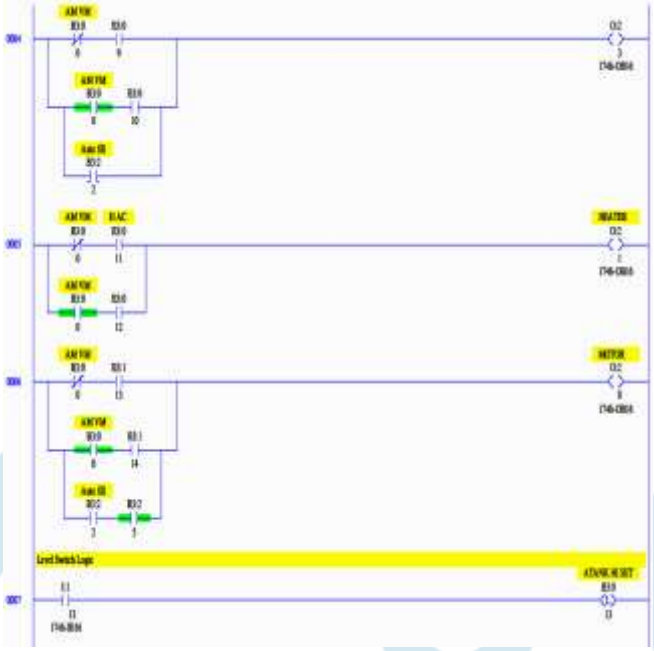

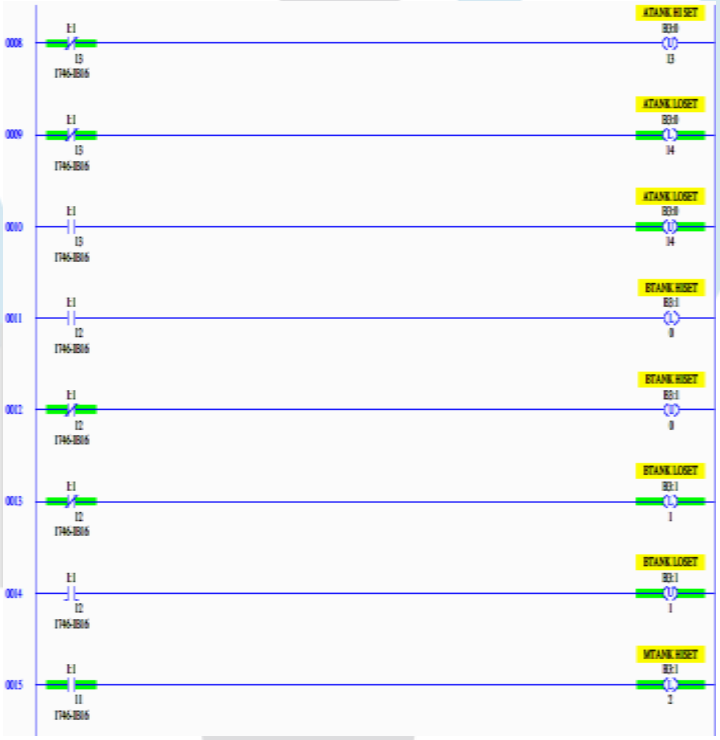

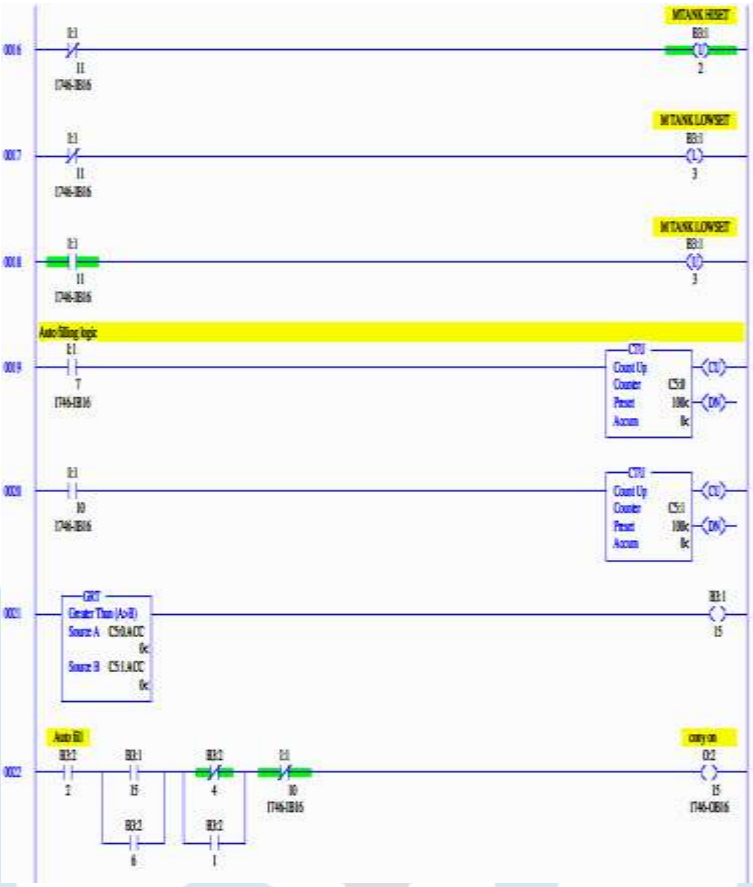

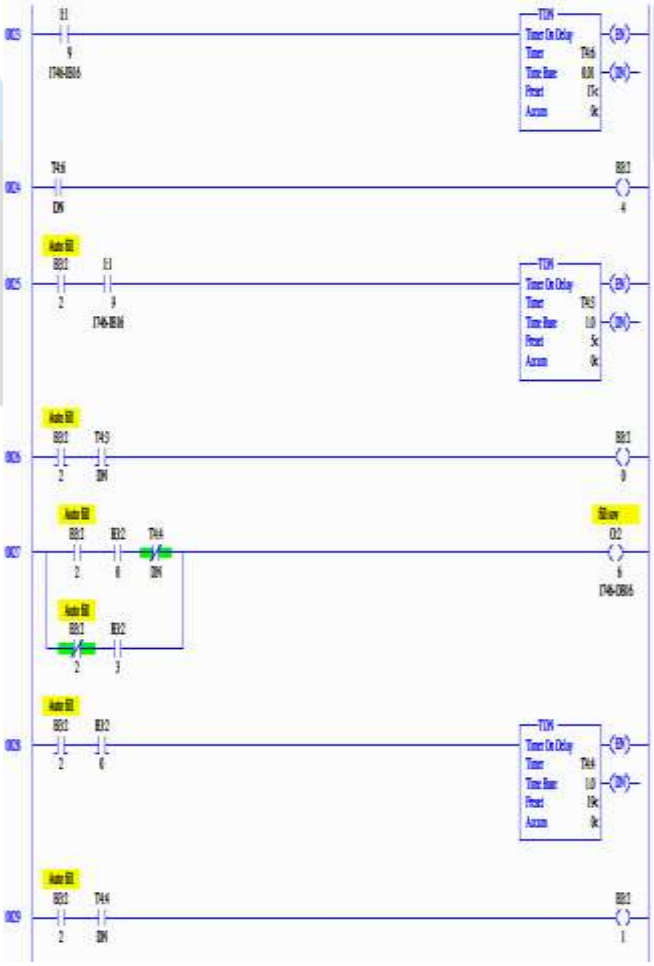

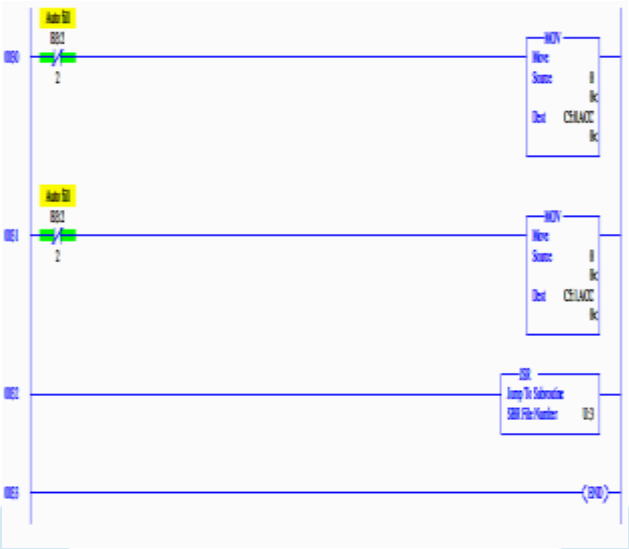

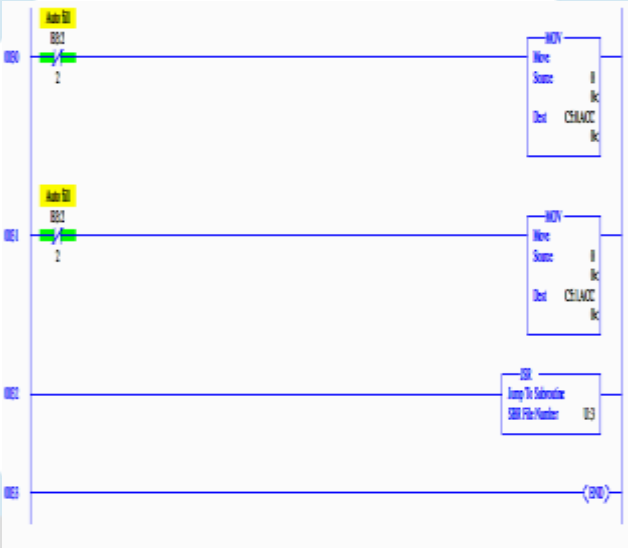

V. SCADA SCREEN

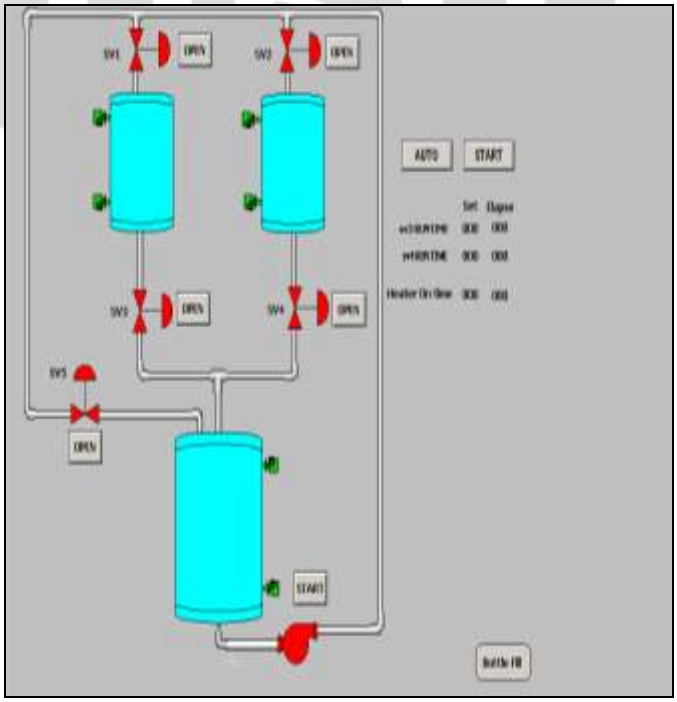

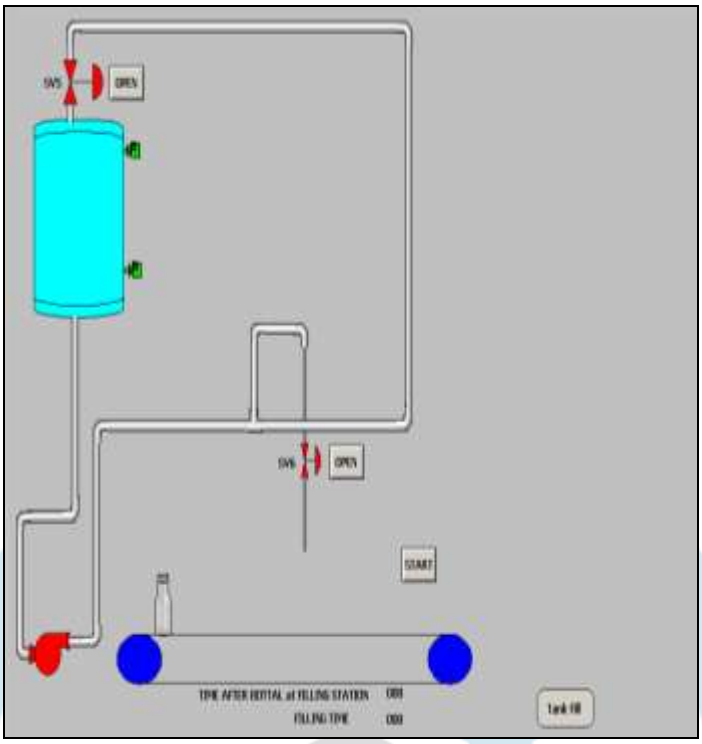

VI. CONCLUSION

This paper has proposed an application of automation using a PLC based fully automatic untouched liquid filling system. The system achieved the demand of high-speed production using the minimum mechanism requirements. The system has provided work efficiency avoiding unnecessary wastage of time and money. The system also provides high accuracy and precision in proportion of liquids mixed. Although the given system illustrates the mixing process of two liquids, many numbers of liquids may be mixed in varying proportions. It is true that the use of PLC is a costly affair particularly for small industries but it offers many advantages that overcome its cost and very much economical to big industries of large production. One of the additional features of the proposed system is the use of SCADA that makes it controlled through a remote location. Complete monitoring of the system is possible through SCADA and in fact the process may be stopped or started by SCADA screen. This feature is particularly very useful in case if some fault occurs in the system.

REFERENCES

[1] http://www.plant-maintenance.com/articles/dust_suppression.pdf.
[2] http://hobbyproject.com
[3] http://www.final-yearproject.com
[4] Stuart A.Boyer,scada,international society of Automaion USA,4th Edison,2009
[5] T. Kalaiselvi,R. Praveena,Aakanksha.R,Dhanya ,"PLC based Automatic Bottle Filling system with user defied volume selection",volume 2,Issue 8Augst 2012 .website :www.ijetae.com (ISSN2250-2459).
[6] Arif Ozkan,kerim cetinkaya ,"process Automtion and Mixture Filling System Design',Volume 1(2),December 2012,pp 98- 106,Journal of Engineering Research and Applied science,website:www.jiournaleras.com(ISSN 2147-3471@2012ENT Ltd.)