Experimental Investigation of Performance Enhancement in VCR System by Using Diffuser

[1]Hirakkumar R Tandel, [2]Hiren T Patel

[1]M.E. Student, [2]Assistant Professor
[1]Mechanical Engineering Department,
[1]Mahatma Gandhi Institute of Technical Education & Research Centre, Navsari,India

***Abstract*— The aim of this work is to improve the Coefficient of Performance (COP) of Vapour Compression Refrigeration (VCR) cycle. Improvement in COP of VCR cycle can be achieved by either decreasing compressor work or improving refrigerating effect. In VCR cycle purpose of compressor is to evaluate pressure of refrigerant. Refrigerant leave the compressor with high velocity which may cause splashing in the condenser which may cause splashing in the condenser by erosion. It needed to convert kinetic energy into pressure energy which can be achieved by using diffuser. The performance of the system will be evaluated by practical performance of VCR cycle with the use of diffuser. So, from experiment data it can reveal that COP of simple VCR is 6.83, VCR with diffuser 1 is 7.73, VCR with diffuser 2 is 7.81 and VCR with both diffuser is 8.44. So, performance improvement for diffuser 1 is 13.17%, for diffuser 2 is 14.34% and for both diffuser is 23.86% than simple vapour compression refrigeration cycle.**

***IndexTerms*— VCR system, COP, Diffuser**

I. INTRODUCTION

In last few decades the use of refrigeration and air-conditioning is increased so much for domestic and industrial use. So the amount of heat is released into the environment by the thermodynamic cycle of refrigeration systems is increased because of the widespread application of air conditioning and refrigeration for industrial and domestic use. Saving energy and increasing efficiency has become increasingly critical in refrigeration systems because of the vast amount of energy consumed. Nowadays it is necessary to increase to improve performance of VCR cycle.

II. LITERATURE REVIEW

R. T. Saudagar et. al [1] They had done work with four different diffusers with divergence angle 10^0, 15^0, 20^0 and 30^0 were designed. In this work compressor outlet diameter equal to condenser inlet diameter. They installed diffuser at condenser inlet. Diffuser inlet and outlet diameters were designed. Diffuser's inlet and outlet diameters were designed. They found that at particular discharge pressure they found that diffuser with the divergence angle 15^0 gave better result compared to other diffusers. The discharge pressure increased by nearly 5%. Compressor work is reduced by nearly 14%. Percentage of increase in COP was approximately 16% and rate of heat rejection increased by nearly 4%. By incorporating the diffuser at condenser inlet size of condenser can be reduced.

Neeraj Upadhayay et. al [2] In this work they present the concept of analytical study of VCR system using diffuser and subcooling mainly carried out to improve COP of system. In this work diffuser is installed at condenser inlet. . In the present cycle, the vapour refrigerant leaves the compressor with comparatively high velocity. This high velocity refrigerant directly impinges on the tubing of condenser which may cause damage to it by vibration, pitting and erosion. It results in undesirable splashing of refrigerant in the condenser coil. It also results phenomena called as "liquid hump" which rises level of refrigerant in middle portion of condenser as compared to end. It reduced heat transfer area which reduce condenser efficiency. The size of diffuser selected was 15-degree divergence angle. Diffuser is the static device. It converts the kinetic energy of refrigerant in pressure energy. In VCR system, to avoid the problems of high velocity refrigerant one of the way is to use diffuser at condenser inlet. It has been observed that COP with diffuser along with subcooling has been increased by 27.58% from 2.65 to 3.38 with diffuser. Rate of heat rejection is also increased due to the increase in temperature.

S. Saboor. et. al. [3] In this work they described the analysis of vapour compression refrigeration system by the condenser inlet diffuser concept. This invention produces pressure increase in cycle from 160 psi to 166 psi. COP is increased by 6.2%. Compressor work is reduced by 6.15%. Power consumption can be reduced by 6.15%.

Rishabh Singh. et. al. [4] Their work represents the investigation on the effect on the performance of vapour compression refrigeration system by employing diffuser after the compression exit. Refrigerant R134a is selected for their investigation. . Thus, while calculating the COP with and without diffuser we came to that using the diffuser is very effective since the COP of the vapour compression refrigeration system increase gradually from 2.20 to 3.09. The diffuser helps the compressor in increasing the pressure which ultimately reduces the compressor work or for the same pressure output smaller compressor can also be used. Experimental results show that the COP of simple system without diffuser. They conclude that COP of vapour compression refrigeration system using diffuser increases due to reduction in the compressor work.

Yetti Seva et. al. [5] In their work they used domestic refrigerator of capacity 215 liter is selected for this experiment. Their work deals with improvement of vapour compression refrigeration system by using sub-cooling and diffuser at inlet of condenser and compare refrigerant R-134a, HC mixture (R290/R600a). The refrigeration effect of the modified system with sub-cooling and diffuser is increased due to the refrigerant is HC mixture (R290/R600a) by compare to R-134a. So, the conclusion of their work is COP for existing system is 2.89, for modified VCR system with heat exchanger at condenser outlet COP is 3.04 and the modified system with diffuser at condenser at coil inlet and heat exchanger at condenser outlet, the COP is 3.29.

III. Experiment Setup

In my experiment analysis window air conditioner as a vapour compression refrigeration cycle is used. The capacity of vapour compression refrigeration cycle is 1 ton. There are two diffusers with different divergence angle is used before condenser inlet. As a refrigerant R-22 (Chlorodifluromethane) is used.

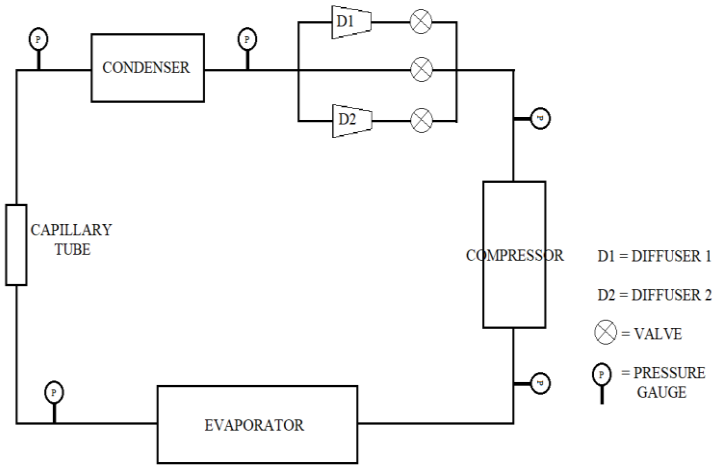

Fig. 1. Line diagram of VCR cycle

The material of diffuser and tubes are copper. The area of diffuser gradually increasing in the direction of flow. There are two diffusers at condenser inlet as shown in Fig.1. The dimension of diffuser given below. The condenser used in vapour compression refrigeration cycle is air cooled type condenser. The diameter of condenser tube is 6.25 mm and the length is around 72 feet. The material of tube is copper. The material and diameter of evaporator is same as condenser. It has also the diameter of tube is 6.25 mm and the length of tube is around 44 feet. There are two diffusers with divergence angle 15^0 and 17^0 is used and their result compared with simple VCR result. The design of diffusers shown in Fig. 2. The area of diffuser gradually increase in the flow direction.

Dimension of Diffuser 1

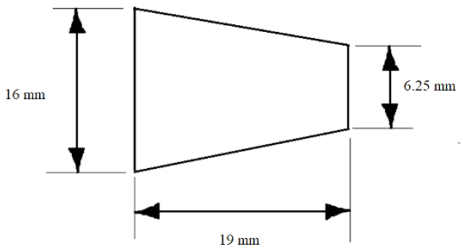

Fig. 3.3 Geometry of Diffuser 1

Dimension of Diffuser 2

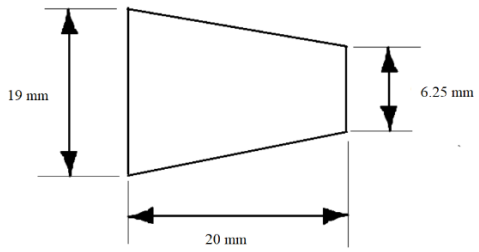

Fig. 3.4 Geometry of Diffuser 2

Fig.2. Experimental Setup

IV. Data Calculation

Following are the observation which was taken during experimental work. In observation temperature and pressure are taken at the following point. Temperature and Pressure mentioned by T and P respectively with point.

1. Evaporator Outlet or Compressor Inlet Temperature and Pressure (T_1 & P_1)
2. Compressor Outlet or Diffuser Inlet Temperature and Pressure (T_2 & P_2)
3. Diffuser Outlet and Condenser Inlet Temperature and Pressure (T_2' & P_2')
4. Condenser Outlet and Capillary Tube Inlet Temperature and Pressure (T_3 & P_3)
5. Capillary Outlet and Evaporator Inlet Temperature and Pressure (T_4 & P_4)

Table 3.1 Observation Data of Simple Vapour Compression Refrigeration Cycle

System	P_1	P_2	P_2'	P_3	P_4	T_1	T_2	T_2'	T_3	T_4
Simple VCR	75	395	390	355	87	14.4	90.2	88.1	33.1	13.7
With Diffuser 1	76	395	397	360	88	14.6	88.3	90.1	31.1	12.9
With Diffuser 2	78	395	395	365	90	14.2	88.9	89.1	30.9	12.0
With Both Diffuser	78	375	390	355	90	14.9	88.0	89.8	30.9	12.8

V. Conclusion

	Refrigerating Effect (KJ/Kg)	Work Done (KJ/Kg)	Heat Rejected (KJ/Kg)	COP
Simple VCR	196	29	200	6.83
With Diffuser 1	202	26	206	7.73
With Diffuser 2	203	26	206	7.81
With Both Diffuser	203	24	206	8.46

On the basis of experimental analysis of vapour compression refrigeration performance by using diffuser at condenser inlet gives better performance than simple vapour compression refrigeration cycle. The diffuser 2 with 17^0 divergence angle gives better performance than diffuser 1 with 15^0 divergence angle and using both diffuser gives maximum performance than both diffuser and simple vapour compression refrigeration cycle. So, from experiment data it can reveal that COP of simple VCR is 6.83, VCR with diffuser 1 is 7.73, VCR with diffuser 2 is 7.81 and VCR with both diffuser is 8.44. So, performance improvement for diffuser 1 is 13.17%, for diffuser 2 is 14.34% and for both diffuser is 23.86% than simple vapour compression refrigeration cycle.

References

[1] R. T. Saudagar, U. S. Wankhede "Experimental Analysis of Vapour Compression Refrigeration System with Diffuser at Condenser Inlet" (2013)

[2] Neeraj Upadhyay "To study the effect of Sub-cooling and Diffuser on the Coefficient of Performance of Vapour Compression Refrigeration System" (2014)

[3] S.Saboor*, M.Yohan, G.Kiran Kumar "Experimental Analysis of Vapour Compression Refrigeration System by the Condenser Inlet Diffuser Concept" (2011)

[4] Rishabh Singh, Navin, Dinkar Prasad Singh "Experimental Investigation of Performance of VCRS with and without Diffuser" (2015)

[5] Yetti Siva et. al."Performance Analysis of Eco-Friendly HC Mixture (R290/R600a) Refrigerant as an Alternative to R-134a in a Vapour Compression Refrigerant System for Sub-cooling using Heat Exchanger at Condenser Outlet and Diffuser at Condenser Inlet" (2015)