Variation in Power response with temperature in P&O based PV module

[1]Navdeep Singh, [2]Sachin Kumar

[1]ME student, [2]Assistant Professor
EED
Chandigarh University

***Abstract*: The maximum power point tracking algorithms have a crucial role in minimizing the PV systems cost by extracting the required power from reduced quantity of panels. In this paper, we will focus on Perturb and Obserb algorithm for maximum power point tracking. We will simulate the Photovoltaic module with this algorithm in MATLAB environment and analyse the variation in power response time curve with variation in temperature and irradiance. The main motive is to get stable maximum power.**

***Keywords*: PV module, Maximum power point, MPPT, Perturb & Obserb algorithm, Photovoltaic cell**

1. Introduction

Photovoltaic power demand is increasing at a blink speed. In the consideration of non-conventional resources, the PV generation is getting a popularity due to environmental and economic benefits. PV system has non-linear characteristics [1]. The solar photovoltaic energy has been widely used in various applications and the maximum power point tracking (MPPT) control becomes an important topic for PV systems, unfortunately, the maximum power varies with alterations in the temperature and solar irradiance that's why, we develop P & O MPPT method for solar PV systems [2].
The power generated by PV panels is DC power, to connect load across it power is converted to AC at an appropriate frequency. Power converters are interfaced between PV system and grid. The possible mismatch between the operating characteristics of load and PV system is most remarkable problem. The Maximum Power Point (MPP) is difficult to attain mostly. To overcome this problem maximum power point trackers are designed. The most effective use of MPPT is to extract the maximum power from the module. Now afterwards dc/dc converter are used to buck or boost the power. Maximum power is transferred by varying the load impedance as seen by the source and matching it at the peak power of it when the duty cycle is changed. There are various MPPT techniques proposed such as, the Perturb and Observe (P&O) method, Incremental Conductance (IC) method, Fuzzy Logic Method etc. Here our focus is on the most popular one (Perturb and Observe (P&O. The basic principle of PV cell is photovoltaic effect. [3]

2. Basic principle of PV cell

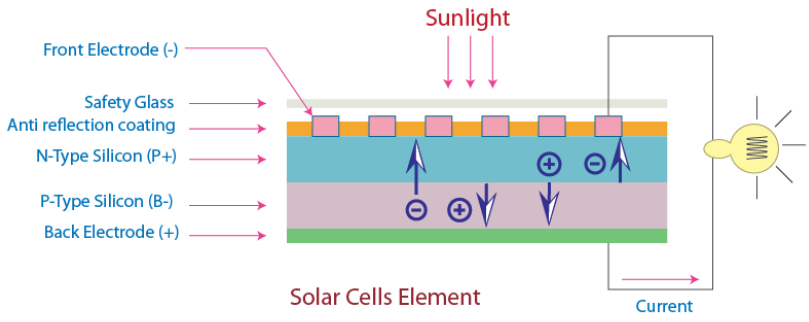

Fig.1. PV cell structure

Solar cell is basically a P-N junction diode, formed by semiconductor material mostly silicon. The sunlight falls perpendicularly on the solar cell. Electrical contacts are formed by metallic grid of the diode and allowing sun light to disperse on the semiconductor which absorbs and convert light into electrical energy. Between the grid lines an antireflective layer is placed to absorb the peak level of light. For this dopant are added to achieve the irreversible properties. On the back side of diode, a metallic layer is placed for maintaining an electric contact. The principle of PV cell is same i.e. photoelectric effect.
So, the photon from the radiation the electricity can be generated by the process of photovoltaic effect. [4]

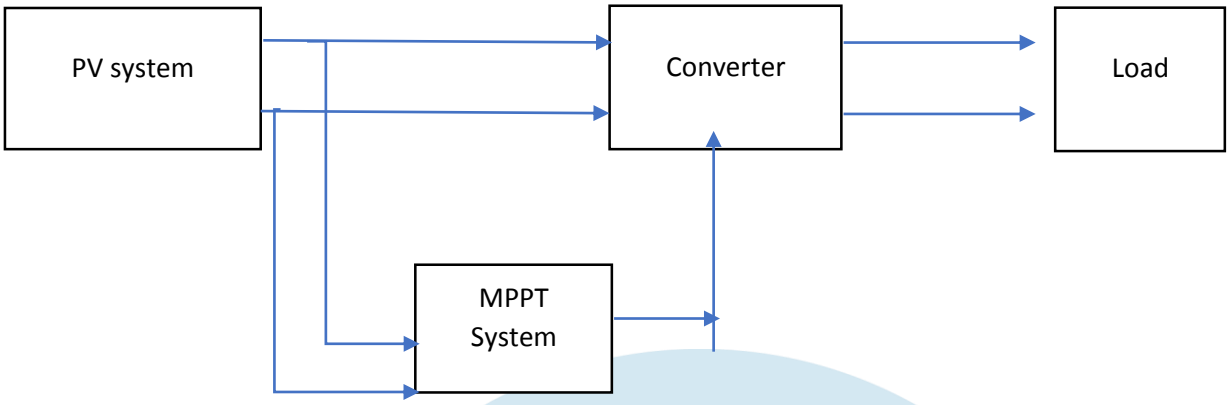

Fig.2. Block diagram of direct duty cycle

3. P&O algorithm

A small perturbation is introduced in this algorithm. The perturbation causes continuous variation in the power of module. If the power rises due to the perturbation then the perturbation is continued in the same direction. The power at the next instant decreases after the peak power is reached, and after that the perturbation reverses. The algorithm oscillates around the peak point when the steady state is achieved. The perturbation size is kept very small in order to keep the power variation small [5]. The algorithm can be easily studied from the fig.3.

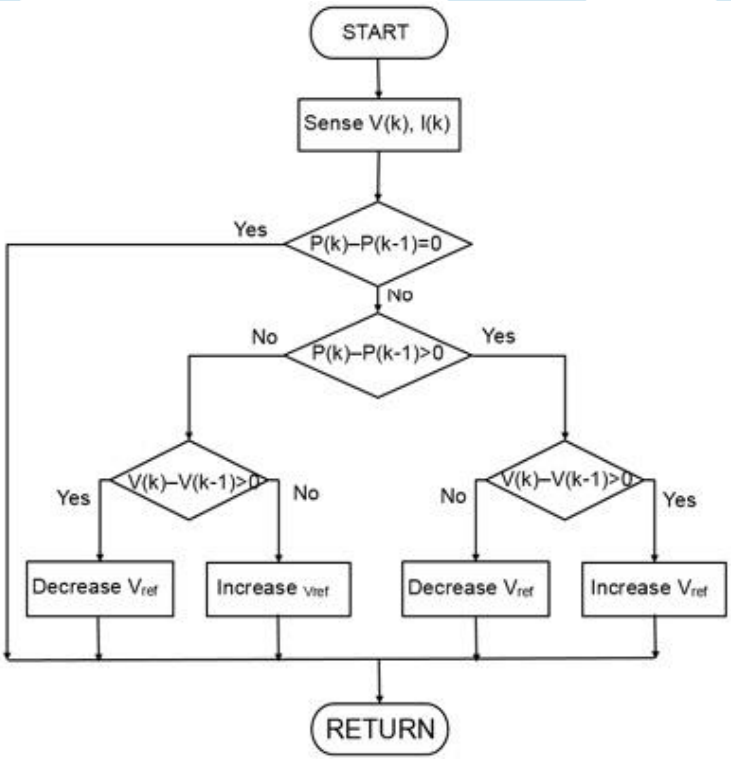

Fig.3. P&O algorithm

4. Literature Review

It deals with single diode model of solar cell. The two-diode model is established which give better output than one diode model. It nourishes the maximum power point. [6] The influence of temperature is much lesser than that of irradiance. The impact of irradiance is much bigger on the output power. [7]

The maximum power point is point which extracts the maximum output power from the PV module. The maximum power point can be tracked by implementing several MPPT algorithms and methods. The mostly applied conventional techniques are Perturb and Observe technique and Incremental Conductance method. Both the techniques include iterative ways to sum out the maximum power point. These are simple and cost-effective techniques to extract the maximum power point. [8]

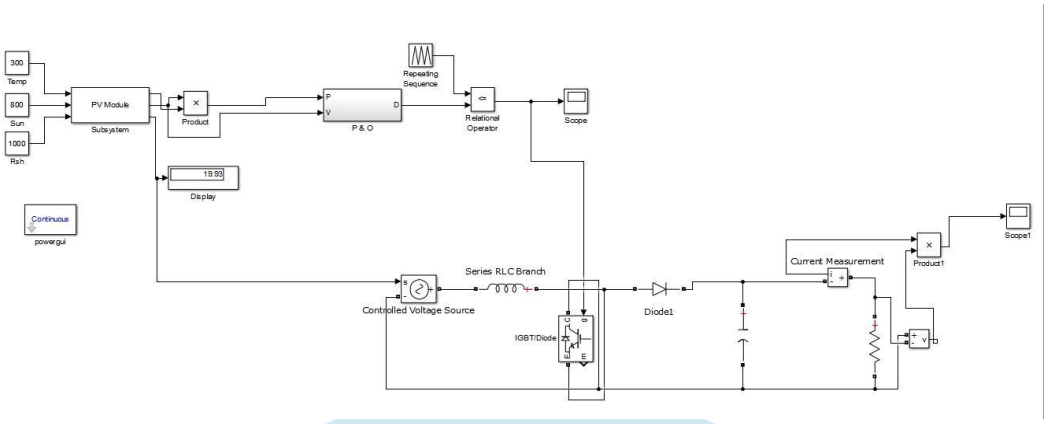

Fig.4. Simulink model of P&O MPPT technique

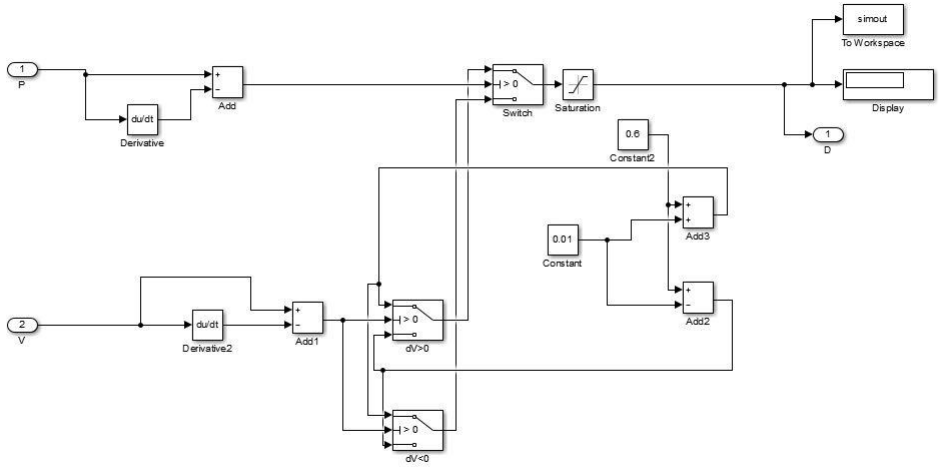

Fig.5. P&O algorithm Block

5. Results

In this we have assumed δ=0.6 i.e. duty cycle & Solar irradiance β=1000W/m^2

The fig.6. shows the power response with respect to time at two different cell temperatures

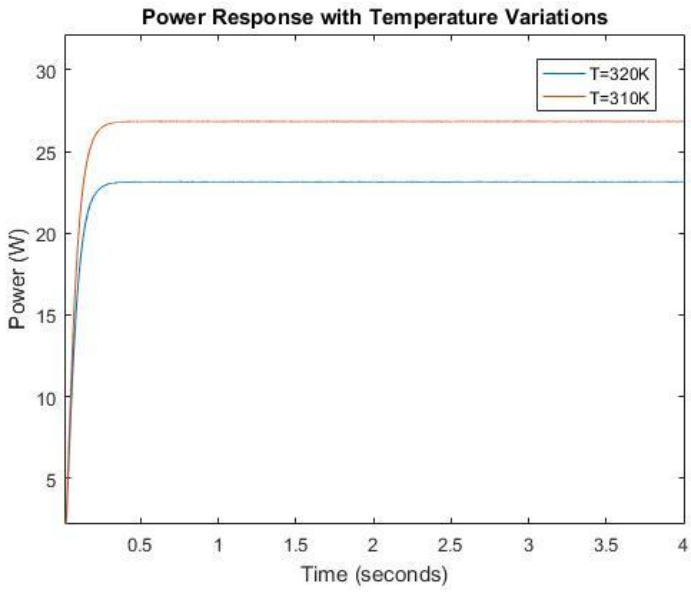

Fig.6. Power response with temperature variation

Temprature	Duty Cycle (δ)	Maximum power (P)
27oC	0.6	27 W
37oC	0.6	22 W

6. Conclusion

As above we have designed a Simulink model of P&O technique with a PV module in MATLAB environment. Then we have introduced environmental factors to figure out the stable power with respect to time. In this paper variation in the temperature are studied. We conclude that the power time curve shifted down when we increase the cell temperature. So maximum power is achieved. Then we can cease out that PV modules are more efficient in winter than in summer as the cell temperature is less in winter than in summers.

References

[1] Sahu, Tekeshwar Prasad, and T. V. Dixit. "Modelling and analysis of Perturb & Observe and Incremental Conductance MPPT algorithm for PV array using Ċuk converter." *Electrical, Electronics and Computer Science (SCEECS), 2014 IEEE Students' Conference on*. IEEE, 2014.

[2] Garraoui, Radhia, Lassaad Sbita, and Mouna Ben Hamed. "MPPT controller for a photovoltaic power system based on fuzzy logic." *Systems, Signals & Devices (SSD), 2013 10th International Multi-Conference on*. IEEE, 2013.

[3] Christopher, I. William, and R. Ramesh. "Comparative study of p&o and inc mppt algorithms." *American Journal of Engineering Research* 2.12 (2013): 402-408.

[4] Dey, B. K., Khan, I., Mandal, N., Bhattacharjee, A., Kolkata, M., Kolkata, M., … Author, C. (2016). Mathematical Modelling and Characteristic analysis of Solar PV Cell. https://doi.org/10.1109/IEMCON.2016.7746318

[5] Hairul Nissah Zainudin, Saad Mekhilef, *„Comparison Study of Maximum Power Point Tracker Techniques for PV Systems," Proc. 14th International Middle East Power Systems Conference (MEPCON"10)*, Cairo University, Egypt, 2010, 750-755.

[6] Sinha, D., Das, A. B., Dhak, D. K., & Sadhu, P. K. (2014).," Equivalent circuit configuration for solar PV cell" *Proceedings of 2014 1st International Conference on Non-Conventional Energy: Search for Clean and Safe Energy,ICONCE 2014*, (Iconce), 58–60. https://doi.org/10.1109/ICONCE.2014.6808682

[7] Gahid, M., & Spanik, P. (n.d.). Design of Photo voltaic Solar Cell Model for Stand-alone Renewable System, (2), 285–288.

[8] Niloy Barua *et. Al. ,"*Implementation of Cost-effective MPPT Solar Photovoltaic System Based on the Comparison between Incremental Conductance and P&O Algorithm" 2016 IEEE International WIE Conference on Electrical and Computer Engineering (WIECON-ECE) 19-21 December 2016, AISSMS, Pune, India

[9] M. G. Villalva, J. R. Gazoli, and E. R. Filho, "Modeling and circuit-based simulation of photovoltaic arrays," in Power Electronics Conference, 2009. COBEP '09. Brazilian, 2009, pp. 1244-1254.

[10] A. Chatterjee, A. Keyhani, and D. Kapoor, "Identification of Photovoltaic Source Models," Energy Conversion, IEEE Transactions on, vol. PP, pp. 1-7, 2011.

[11] X. Weidong, W. G. Dunford, and A. Capel, "A novel modeling method for photovoltaic cells," in Power Electronics Specialists Conference, 2004. PESC 04. 2004 IEEE 35th Annual, 2004, pp. 1950-1956 Vol.3.

[12] J. A. Gow and C. D. Manning, "Development of a photovoltaic array model for use in power-electronics simulation studies, "Electric Power Applications, IEE Proceedings -, vol. 146, pp. 193-200, 1999.

[13] Z. Salam, K. Ishaque, and H. Taheri, "An improved two-diode photovoltaic (PV) model for PV system," in Power Electronics, Drives and Energy Systems (PEDES) & 2010 Power India, 2010 Joint International Conference on, 2010, pp. 1-5.

[14] [J. Yuncong, J. A. A. Qahouq, and M. Orabi, "Matlab/Pspice hybrid simulation modeling of solar PV cell/module," in Applied Power Electronics Conference and Exposition (APEC), 2011 Twenty-Sixth Annual IEEE, 2011, pp. 1244-1250.

[15] A. Kajihara and A. T. Harakawa, "Model of photovoltaic cell circuits under partial shading," in *Proc. IEEE Int. Conf. Ind. Technol. (ICIT)*, 2005, pp. 866–870.

[16] Taciuc, M. (2017). PV cells I-V characteristic. Explicit equation with three parameters and its simplified forms. *2017 10th International Symposium on Advanced Topics in Electrical Engineering, ATEE 2017*, (x), 709–714. https://doi.org/10.1109/ATEE.2017.7905147

[17] Taciuc, M. (2017). PV cells I-V characteristic. Explicit equation with three parameters and its simplified forms. *2017 10th International Symposium on Advanced Topics in Electrical Engineering, ATEE 2017*, (x), 709–714. https://doi.org/10.1109/ATEE.2017.7905147