DESIGN OF CONVERTER FOR AC/DC MICEROGRID APPLICATION

Shivani S. Khalipe[1]. Sunita M.Lambate[2]. Swati P.Mokashi[3]. Prof. Vaishali D.Burungale[4]

[1,2,3]Students, [4]Professor
S.V.P.M 'S College of Engineering, Malegaon (Bk), Baramati

Abstract:**The micro-grid system is not able to be realized just by assembling convectional DC/DC converters and DC/AC inverters.The economical atmosphere for the software package development is necessary as a result of the delicate management software system is needed for every element to understand the micro-grid system.We have developed new software environment by integrating MATLAB/Simulink which is commonly used in model based design and SCALE for circuit simulation engine.This software development environment enable us to develop software with drastically short time and low cost.**

Keywords**: UPS,Switching Circuit,Relay,Battery,Transformer.**

1.INTRODUCTION

Recently, the micro-grid system has been proposed which integrates new renewable energy sources such as small wind turbines or solar cells, rechargeable batteries, AC/DC or DC/DC power converters, and electrical loads via independent local AC-power grids or high voltage DC-Bus. Especially so-called smart house which reduces the unpredictable disturbance of the utility grid by using micro grid system equipped within the house is attracting much attention. To realize such smart house, each DC/AC and DC/DC converter connected to the local power grid should be controlled by digital processor so as to achieve optimization of the whole system by using communication among the components of the network. Using digital processor has also an advantage to implement complex control algorithm which is required to connect to DC bus. The electrical grid system is continually experiencing unprecedented changes driven mainly by key technology trends. It is becoming more decentralized due to the growing penetration of renewable sources and technology advances in energy storage, for instance. These changes are happening at all levels of the grid system from transmission and utility grids to distributed grids, and it is already preconized by many industries that a return to a purely centralized grid system will not happen. On the other hand, at the distributed network level, dc micro grids, exclusively used in telecommunication/data centers applications in the past, are widely proposed nowadays in applications where electricity is generated by renewable sources.

2. LITERATURE SURVEY

1)'Power quality analysis with microgrid :an experimental approach'

ArangarajanVinayagam, KSV Swarna1, Sui Yang Khoo1, Alex Stojcevski.In this paper author explains different methods of microgrid.this paper gives brief knowledge about modification in microgrid system.

2)Power Quality Problems and New Solutions

A. de Almeida, L. Moreira. J. Delgado.From this paper author explains the power quality issue their causes, description, consequences**.**

3)Power Quality Impacts in a Typical Microgrid

ArangarajanVinayagam, Asma Aziz, KSV Swarna, SuiyangKhooand Alex Stojcevski In this paper author explains knowledge about microgrid system and the impacts of this typical microgrid.

4)"Hardware Implementation of PowerSharing and Power Quality Improvement for Grid Integration of Microgrid" ,Divya RS M NandukrishnanManjula G Nair . In this paper author explains the hardware implantation of microgrid & power quality improvement for this microgrid system.

5)"Power Quality Assessment for Microgrid Scenarios" George SeriţanPolitehnic University of BucureştiFacultaty of Electrical engineering, DMAECS BUCHAREST ROMANIA. In This paper author deals with the rising issue of power quality. A main point in the analysis performed during this work is that the characterization of the electrical masses gift within the future micro-grids.

6)"Application of a Combined System to spice up Power Quality in associate Island Microgrid"

Ma Zhengbo, Li Linchuan and Dong Tuo.This paper proposed a combined system constructed by SAPF and SVC to improve the power quality of the island microgrid which adopted appropriate control system. The combined system can mitigate harmonic

currents and compensate reactive power simultaneously.

3.BLOCKDIAGRAM

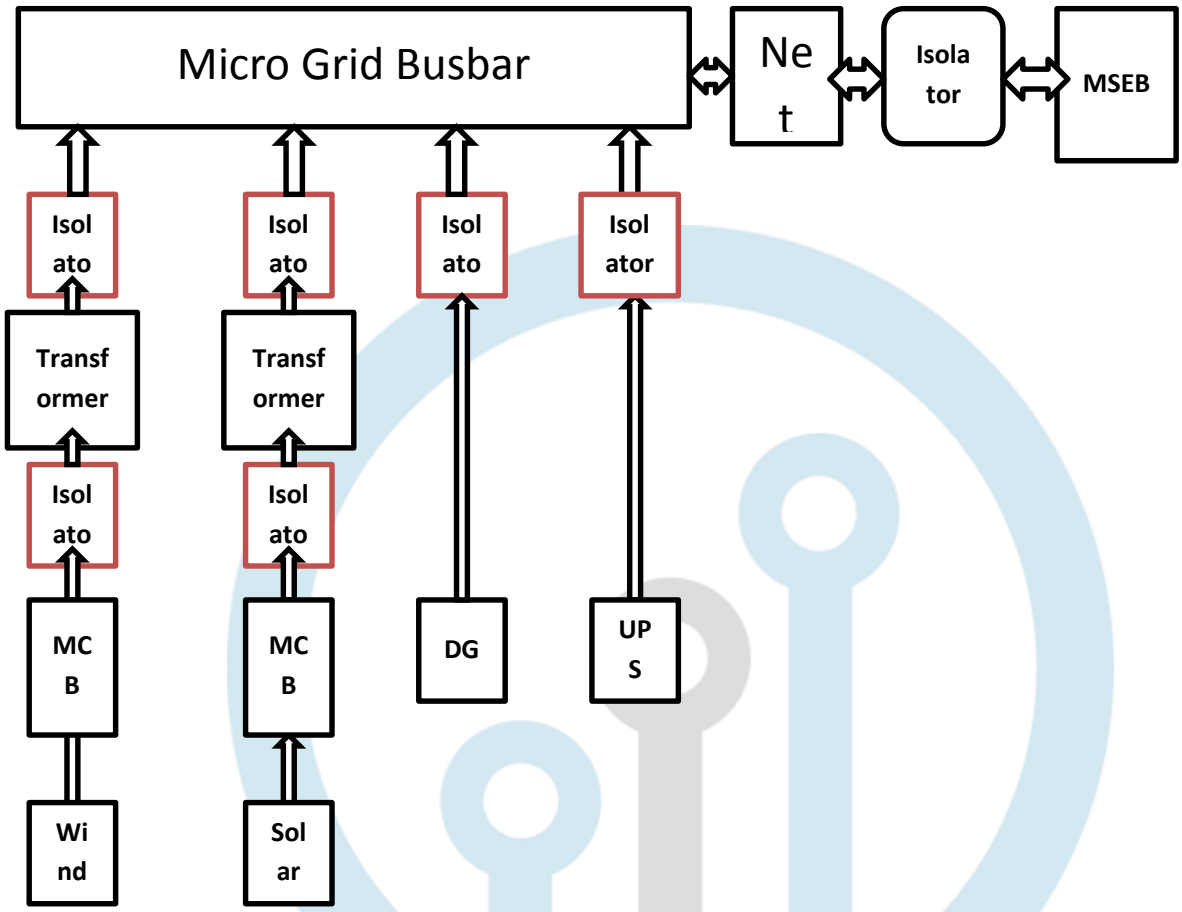

Block Diagram of Microgrid system

CONVERTER DIAGRAM

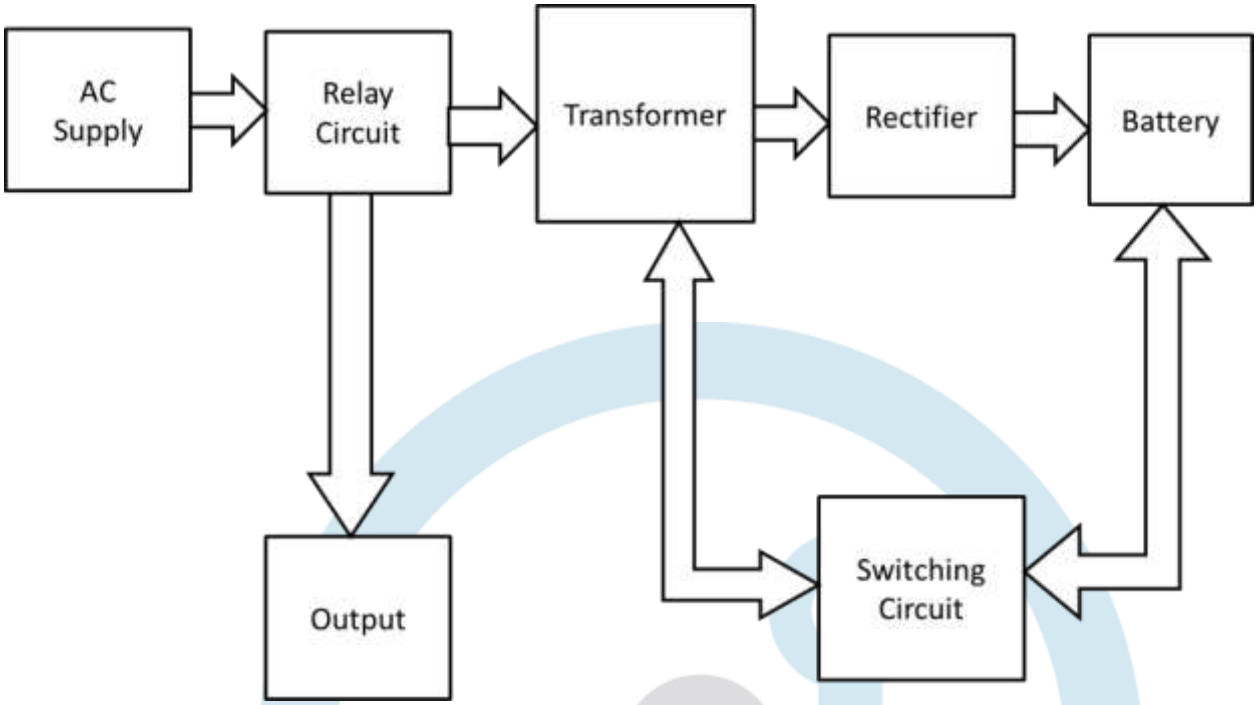

Fig.Converter Diagram

Block Diagram Description

Block diagram consist of:

1) Relay Circuit

2) Switching Circuit

3) Transformer

4) Rectifier

5) Battery

The schematic drawing of proposed stand alone hybrid PV/ wind/ battery/ UPS/ diesel energy system is show in the figure 2. As shown in this figure, wind turbine is connected to AC bus through AC to DC converter. In which wind turbine generates AC electricity, this AC electricity is converted into DC by using AC to DC converter. Solar panel is connected to DC bus through DC to DC converter. Solar panel consists of one or more PV module's. This PV module consists of number of PV cells. PV cell's covert sunlight into direct electricity (DC).Battery charger is connected to DC bus to charge the battery bank from the respective wind turbine and PV panel through a bi-directional AC to DC converter. Diesel generator is connected to AC bus as a backup source of energy. UPS that is uninterruptible power supply or source is connected to the AC bus to provide emergency power to load when input power source or mains power fails.

To realize such smart house, each DC/AC and DC/DC converter connected to the local power grid should be controlled by digital processor so as to achieve optimization of the whole system by using communication among the components of the network. Using digital processor has also an advantage to implement complex control algorithm which is required to connect to DC bus. For instance conventional DC/DC converter is not able to connect its output via DC-Bus as shown in Fig. because to control only output voltage is not enough to control current flow.

The electrical grid system is continually experiencing unprecedented changes driven mainly by key technology trends. It is becoming more decentralized due to the growing penetration of renewable sources and technology advances in energy storage, for instance. These changes are happening at all levels of the grid system from transmission and utility grids to distributed grids, and it is already preconized by many industries that a return to a purely centralized grid system will not happen. On the other hand, at the distributed network level, dc microgrids, exclusively used in telecommunication/data centersapplications in the past, are widely proposed nowadays in applications where electricity is generated by renewable sources. However, apart from specific cases, these microgrids are designed to operate in both islanded and grid-tied modes and are usually termed as hybrid ac/dc microgrids. An example of such microgrid is shown in Figure. It is characterized by a combination of distributed generation units, storage systems

and loads which are connected to either an ac or a dc grid via a local interface. Both grids are connected to the main distributed ac grid via a multiport power converter capable of handling different energy conversions. Such hybrid microgrids can bring significant improvement for key applications as in commercial buildings.

4.OPERATION OF CONVERTER

DC/DC converters are also known as ‘‘Switching Regulator’’. From DC sources such as a battery, fuel cell, solar panels, Electric Vehicles voltage levels requires to be changed to another level, either to supply a DC load or to be used as an intermediate voltage for Associate in Nursing adjacent power electronic conversion like a DC/AC converter. DC/DC converters coupled together with AC/DC converters enable us the use of High Voltage DC (HVDC) transmission which can send power through grids with much more efficiency than the AC grid The bi-directional converter is seen to consist of a haIf-bridge topology on the primary of a high frequency isolation transformer and a current-fed push-pull topology on the secondary of the transformer. The DC bus is connected to the half-bridge end and the battery is connected to the current-fed push-pull end of the converter. The converter operates in the fonvardkharging mode or the backup kiischarging mode, depending on the status of the DC mains. All switches are bi-directional and are gated according to the operating mode of the converter.

5.COMPONENTS USED

5.1 RECTIFIER

A rectifier is associate degree device that converts electrical energy (AC), that sporadically reverses direction, to electricity (DC), that flows in just one direction.Rectifiers have several uses, however ar usually found serving as parts of DC power provides and high-voltage electricity power transmission systems. Rectification might serve in roles aside from to come up with electricity to be used as a supply of power.As noted, detectors of radio signals function rectifiers.In gas heating systems flame rectification is employed to observe presence of a flame.

5.2 TRANSFORMER

Transformer works on the principle of Faraday's law of magnetic force induction.That is, if magnetic flux in a coil is changing with time, emf will be induced in coil.In its simplest form, it has an iron core with two coils primary and secondary wound on it.

5.3 BATTERIES

Batteries are a collection of 1 or more cells whose chemical reactions create a flow of electrons in a circuit .All batteries ar made from 3 basic components: an anode (the '-' side), a cathode (the '+' side), and some quite solution (a substance that with chemicals reacts with the anode and cathode).When the anode and cathode of a battery is connected to a circuit, a chemical reaction takes place between the anode and the solution. This reaction causes electrons to flow through the circuit and back to the cathode wherever another reaction takes place .When the material in the cathode or anode is consumed or not able to be utilized in the reaction, the battery is unable to produce electricity. At that point, your battery is "dead."Batteries that must be thrown away after use ar known as primary batteries. Batteries which will be recharged ar called secondary batteries. Charging a LiPoLithium polymer batteries, for example, can be recharged Without batteries, your quadcopter would have to be bound to the wall, you would have to be compelled to hand crank your car, and your Xbox controller would have to plugged in allthe time (like in the good old days).Batteries provide how to store electrical mechanical energy in a very transportable container. Try Other Relevant Tool.

5.4 H BRIDGE

An H bridge is associate degree electronic circuit that switches the polarity of a voltage applied to a load. These circuits are usually used in AI and different applications to allow DC motors to run forwards or backwa h-bridges from many on- and off-line resources.After all these circuits are not terribly complicated. Some of those resources are good, some are not so much. However when I’ve started working with them, I’ve realized that many of my experiences were not documented and some of the things I’ve learned seemed to be missing from those descriptions. So I decided to write down what I’ve learned and try to organize that description into an easy to understand yet comprehensive structure.This work started off as a three-part series I’ve written, whereas developing the µModule H-bridge.While the present material relies on those articles, it corrects several errors and is expanded and updated greatly.

5.5 RELAY

Relays area unit switches that open and shut circuits electromechanically or electronically. Relays management one electric circuit by gap and shutting contacts in another circuit. As relay diagrams show, once a relay contact is often open (NO), there's associate degree open contact once the relay isn't energized. When a relay contact is often Closed (NC), there's a closed contact once the relay isn't energized. In either case, applying electrical current to the contacts can modification their state.

Relays area unit typically wont to switch littler currents during a feedback circuit and don't sometimes management power intense devices aside from small motors and Solenoids that draw low amps. Nonetheless, relays will "control" giant voltages Associate in Nursing amperes by having an amplifying impact as a result of a tiny low voltage applied to a relays coil may end up in a very large

voltage being switched by the contacts .Protective relays will forestall instrumentation harm by detection electrical abnormalities, as well as over current, undercurrent, overloads and reverse currents. In addition, relays also are wide wont to switch beginning coils, heating parts, pilot lights and audible alarms.

6.FUTUREWORK:

Provide continuous power supply without interruption and increases productivity. Economic and reliable operation of power system.

7.ACKNOWLEDGEMENT:

We would like to thank our guide Prof. Vaishali D.Burungale of Electrical department for the valuable guidance and constructive suggestions,this helps us in making our project**.**

8.CONCLUSION :

Microgrid, as a promising new power management system, is proposed for accommodating growing distribution generation and energy storages; for example, electric vehicle charging stations can act as an ideal storage resource in microgrids. Distributed renewable generations, energy storage systems, and local loads are key elements of a microgrid. DC microgrid is specially designed for distribution power systems dominated by those generations, storages, and loads that have DC links. In this chapter, the hierarchical structure of DC microgrids is introduced. With autonomous voltage control scheme at primary control level, a DC system can well operate autonomously. Secondary and higher control levels enable further optimization on accurate power sharing, voltage restoring, and energy management. Virtual impedance method is introduced for assessing DC power system dynamics.DC microgrids have significant advantages in terms of converter cost, distribution efficiency, power supply reliability, and controllability compared to AC ones,whereas the difficulty in DC protection is the major weakness.

REFERENCES:

[1] R.H. Lasseter, P.Piagi, "Microgrid:A conceptual solution" IEEE Power ElectronicsSpecialisits Conference, VoI.6(2004),pp.428S-4291.

[2] T.Kato, M. Hisada, YSukuki, and H.Yamawaki, "Feasibility of increase in smoothing-capacitor of battery system for dumping power oscillation in transition to isolated operation of distributed generator",INTELEC 2008, pp.I-7.

[3] M.Ahmed, M.Kuisma, O.Pyrhonen, P.Silventoinen, "Sliding mode control for buck-boost converter using control desk dSPACE" Power Electronics and Drive Systems, 2003. PEDS 2003. pp.1491-1494 vol.2 .

[4] H.Kidokoro, M.Nakahara, S.Nakamura, "The development of software of digital power supply applied for the Micro-Grid System by using Model Based Design" , " lElCE - EE2011-6

[5] M.Nakahara "SCALE K.516CW" Users Manual.

[6] P.1. Schubert, L.Vitkin, D.Braun "Model-based Development for Eventdriven Applications using MA TLAB :Audio Playback Case Study. SAE 2007-0 1.0783.