MPPT with current Control for a PMSG small wind turbine in a Grid-connected DC Microgrid

Ms. Savitha H T[1], Ms. Pooja Lamani[2], Prof. Praveena Anaji[3], Prof. Nandish B.M[4]

[1, 2]UG Students, [3, 4]Assistant Professor
Department of EEE, JIT, DVG

***Abstract*: This paper presents a Maximum Power Point Tracking (MPPT) system for a small wind turbine (SWT) connected to a DC microgrid under grid-connection conditions. The system consists of a Permanent Magnet Synchronous Generator (PMSG) driven by a SWT which is interfaced to the DC microgrid through a rectification stage and boost converter. The proposed MPPT system is based on the relationship between the DC link power and voltage, which are used to obtain the required inductor current in the boost converter and current control are explained in detail. Simulation of the system operating under varying wind conditions is presented.**

INTRODUCTION:

Wind energy has populareds in the past decades as the renewable energy sources due to the possibility usage of conventional energy sources. Wind energy is preferred now a days because it is clean, pollution-free, exhaustible and secure.

Small wind turbine are the one which do not exceed 50kW, However nowadays SWTs are facing the problems of becoming obsolete due to the decrease in price and increase in efficiency of photovoltaic installations. In countries with low wind speeds, SWT installations are virtually inexistent. However in countries where high wind speeds are common, installation of SWTs in remote sites are still viable even though they have high installation and maintenance costs.

The wind speed is instantaneously varying, it is essential for the rotational speed to be variable to maintain the equality of the TSR to the optimal one at all times. In the operation of variable speed condition a power electronic converter is essential to convert the variable-voltage-variable-frequency of the generator into a fixed-voltage-fixed-frequency that is suitable for the grid.

A microgrid can be of two type it may be AC, DC or a combination of both, depending on its particular utilization and application. The concept of the microgrid has gained popularity due to the increasing number of distributed power generation systems, as well as its ability to form a self sustainable electrical grid system. The main important aspect of microgrid is the ability to operate both grid-connected mode and island mode. In island-mode the mircogrid is disconnected from electrical grid, while In grid-connected mode the microgrid is connected through a coupling point to the electrical grid. Different scenarios call for different AC or DC microgrid configurations, but DC microgrid are highly being researched due to the number of advantages offered. A DC microgrid offers advantages like lower conversion losses due to less conversion stages(DC to AC and vis-versa), no synchronization, phase or frequency issues(as present in AC microgrid), and independence from voltage sags, dips, and others power quality issues occurring on the electrical AC grid side. These advantages makes the DC microgrid attractive for use with consumer electronics, electric vehicle charging, telecommunication equipment and military equipment.

In the electric generators, permanent magnet synchronous generator is preferred due to its high efficiency, reliability, power density, gearless construction, light weight, and self-excitation features. Controlling the PMSG to achieve the maximum power point can be done by varying its load.a boost converter is one of the possible solutions, where by controlling the duty cycle of the converter the apparent load seen by the generator will be adjusted and thus, its output voltage and shaft speed. In order to determine the optimal operating point of the wind turbine, a maximum power point tracking system is essential to be included in the system. A block diagram of complete system is shown in Fig1.This proposed MPPT system varies with the duty cycle of the boost converter according to the change in the DC link power and DC link voltage to obtain maximum power output at all wind speeds.

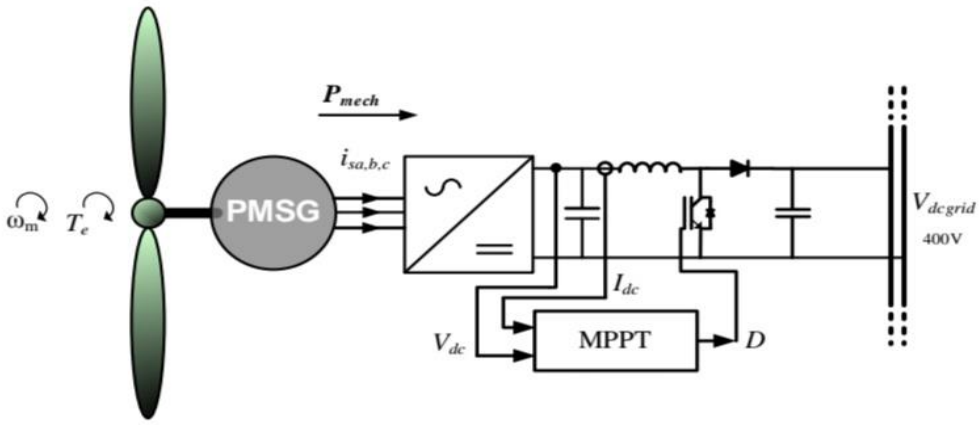

Fig 1: Block diagram of wind turbine system connected to a DC microgrid

System:

The small wind turbine is a complex system which provides the energy for the utility grid as well as for the local, stand-alone loads. One of the goals of presented solution is modularity which allows to configure system easily to use accordance. General system is presented in Fig1 and consists of following modules:

Module 1 - Small wind turbine with low speed permanent magnet synchronous generator.

Module 2 - AC/DC converter with Maximum power point tracking system.

Module 3 – DC/DC converter which is used to boost up the input DC voltage in order to get the maximum DC output voltage.

ELECRICAL CONVERTION MODELLING:

The most commonly used topology for the rectification of PMSGs used in small wind turbine. The three phase diode rectifier normally has a largely capacitive DC link which determines the voltage across the PMSGs terminals.

The boost converter is a switching converter that produces a higher average output voltage(DC microgrid voltage) then the input voltage(DC link voltage). For the boost converter, the voltage conversion ratio of the output voltage to the input voltage, which is a function of the duty cycle. The boost converter can be operated in two modes continuous conduction mode and discontinuous conduction mode, here the boost converter topology operates in continuous conduction mode in which the current through inductor never goes to zero i.e. inductor partially discharges before the start of switching cycle. That changes according to the change in DC link voltage and DC link power. The main advantages of incremental MPPT technique is independence of this technique from wind turbine parameters. This technique only requires power output measurement for operation. This can be readily achieved from DC link current and voltage without requiring any speed or wind measurement.

BLOCK DIAGRAM:

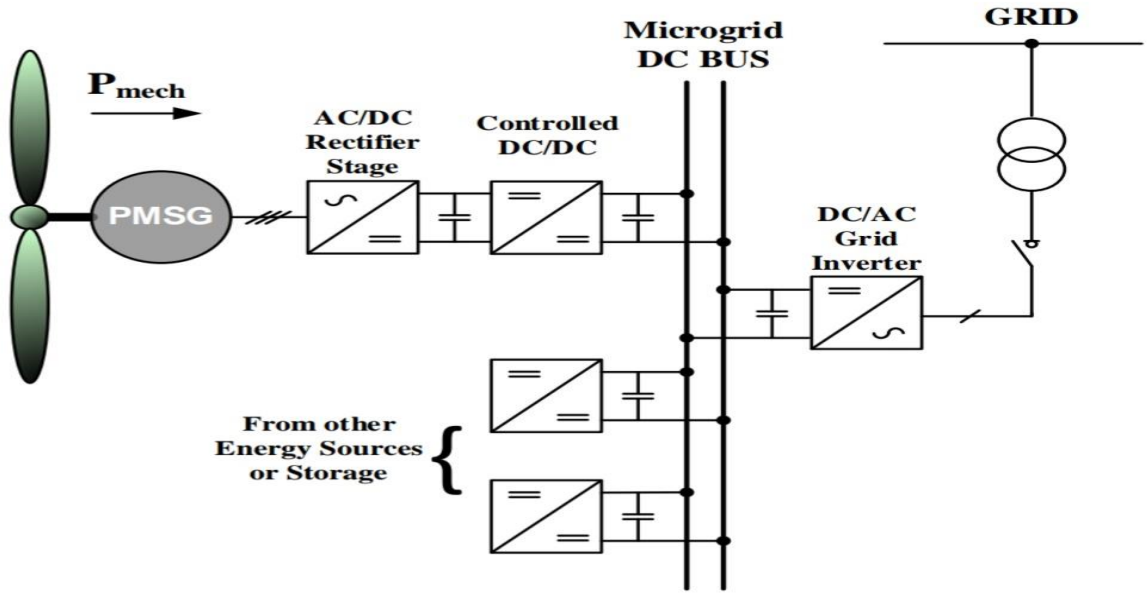

Fig 2: Block diagram of Small Wind Turbine in a Grid-connected DC microgrid

The considered DC microgrid setup is shown in Fig2 for the case being considered in this paper, the microgrid is assumed to be operating in grid-connected mode through the grid inverter. The SWT consists of a 3-phase rectifier whose DC output voltage is controlled via a DC/DC converter. The boost converter topology is used to interface the rectifier output to the DC microgrid.

SIMULINK MODEL:

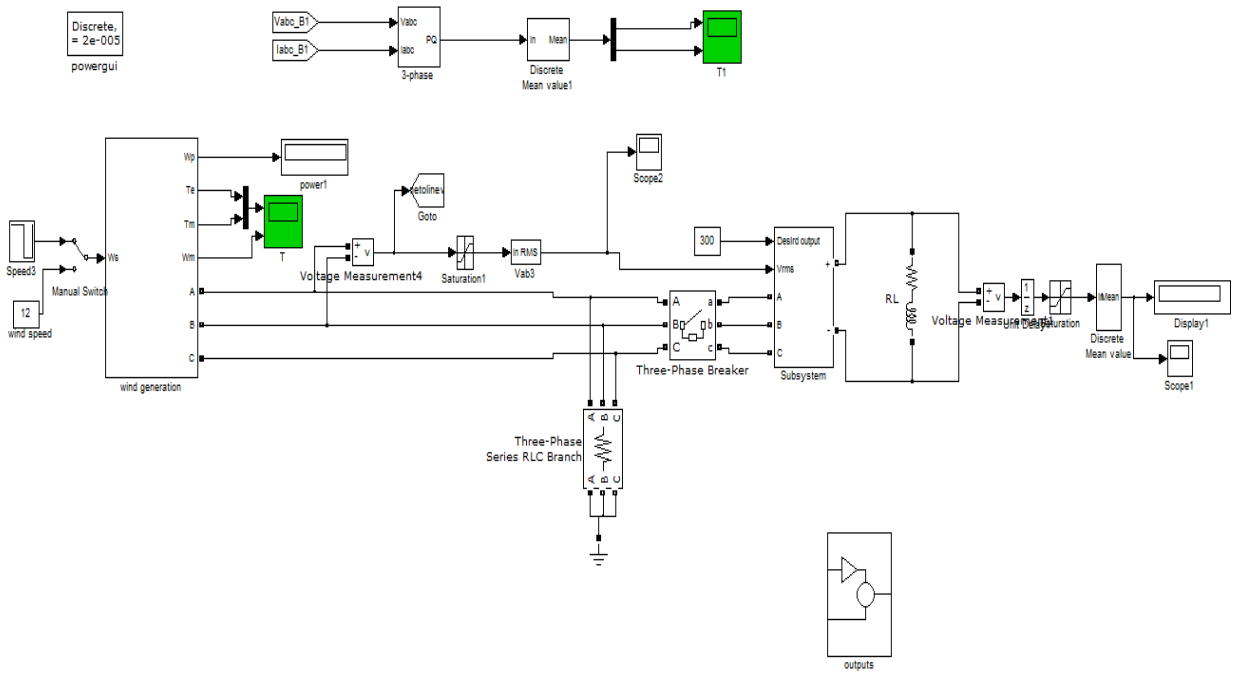

Fig 3: Wind turbine including PMSG and Boost converter simulink model

RESULTS:

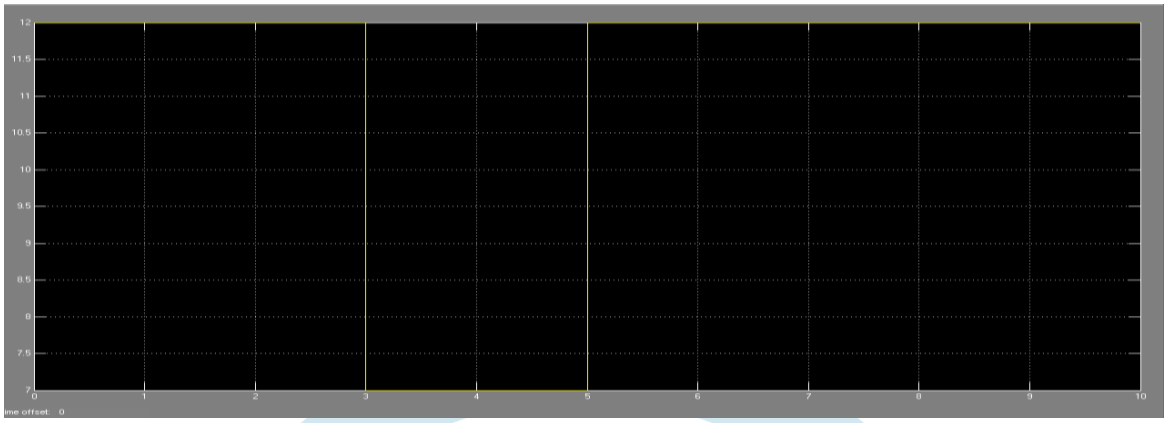

Fig 4: Wind speed

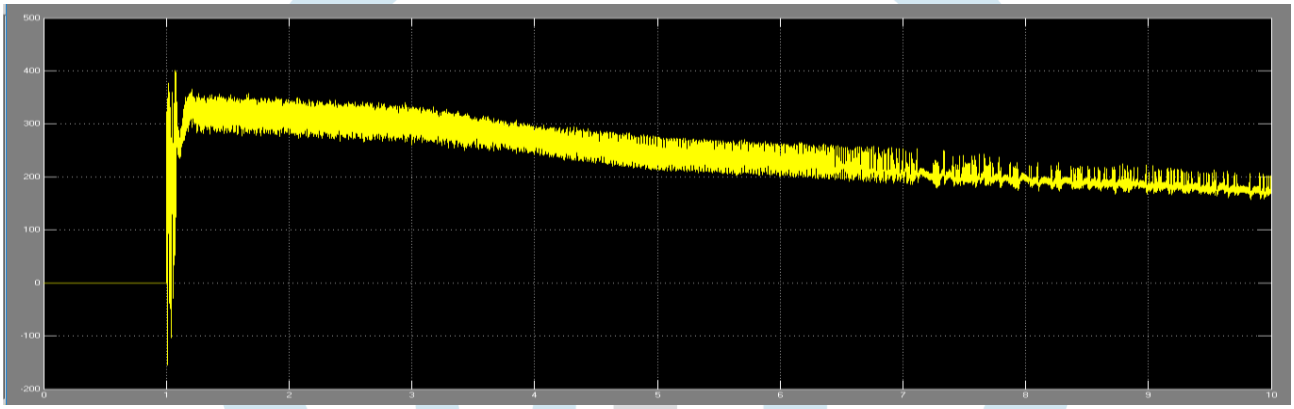

Fig 5: DC link Voltage

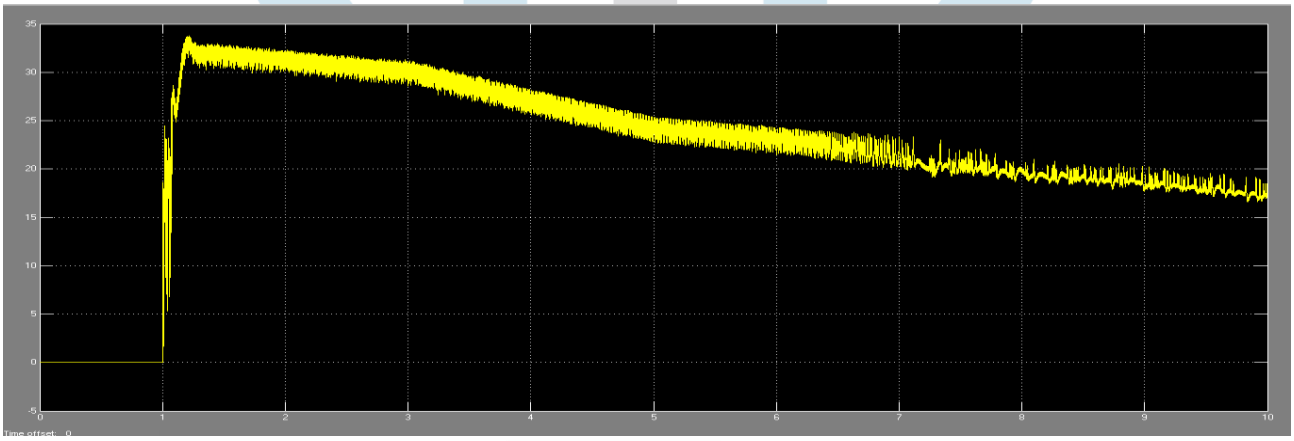

Fig 6: DC link Current

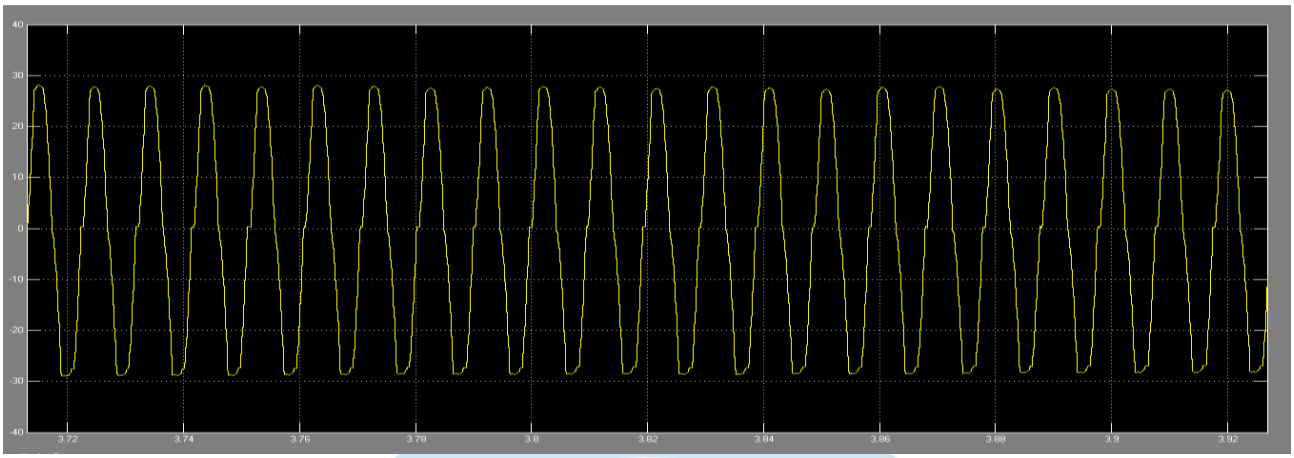

Fig 7: Stator Current

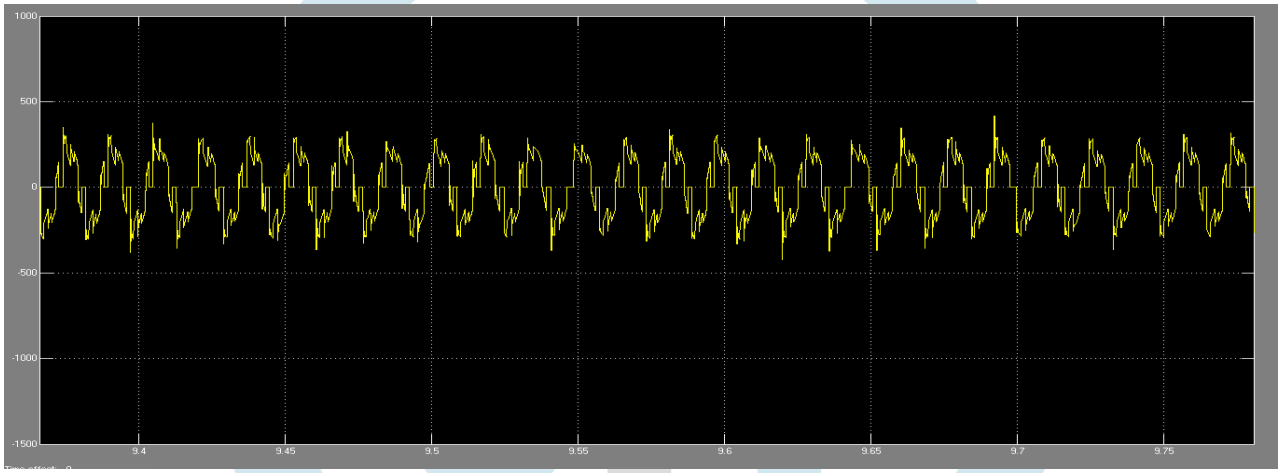

Fig 8: Line to Line Voltage

CONCLUSTION:

The paper presents an MPPT model to obtain the optimal power operation of a small wind turbine connected to a grid-connected DC microgrid. The system consisting of a Parmanent Magnet Synchronous Generator connected to the Small Wind Turbine which is interfaced to the grid-connected DC microgrid through a rectification stage and a boost converter. The proposed MPPT model is successfully implemented in Matlab simulation model and simulation for varying wind speeds were carried out. The simulation results showed that optimal power point operation was achieved for all wind speeds, providing maximum power output into the DC microgrid under all conditions

REFERENCES:

[1] Damiel Zammit, Cyril Staines, Alexander Micallef, Maurice Apap, "Optimal Power Control for a PMSG Small Wind Turbine in a Grid-Connected DC Microgrid".
[2] Majid A, Abdullah, A.H.M. Yatim,Chee Wei, Tan, "A Study of Maximum Power Point Tracking (MPPT) algorithms for Wind Energy System.
[3] D. Zammit, C. S. Staines, M. Apap, A. Micallef, "Over view of buck and boost converter modeling and control for stand-allone DC microgrid operation".
[4] Michal Rolak, Radoslaw Kot, Mariusz Malinowski, Zbigniew Goryca, J. Tomasz Szuster, "AC/DC converters Maximum Power Point Tracking algorithm for complex solution of small wind turbine".
[5] Wei Qiao, Ronald G. Harley, Ganesh K. Venayagamoorthy. "Dynamic Modeling of Wind Farms with Fixed-Speed Wind Turbine Generator".
[6] Monic Chinchila, Santiago Arnaltes, Juan Burgos, "sControl of permanent-magnet applied to variable-speed wind-energy system connected to the Grid."