SIMULATION OF SINGLE PHASE UNIPOLAR INVERTER USING MATLAB

Ms. Srilakshmi J N[1], Ms. Tejashvini K C[2], Prof. Nandish B M[3], Prof. Nagaraj Bodravara[4]

[1, 2]UG Students, [3, 4]Assistant Professor
Department of EEE, JIT, DVG

***Abstract*: The pure sinusoidal waveform is very important for the appliances to increase their life time. In that case, by using normal solar inverters it is a difficult job to obtain the pure sine wave as they produce mainly square or quasi waves. Hence, here in this project we are employing a single-phase pulse width modulation technique with the sliding mode controller. The SPWM is the most common method in motor control and inverter applications which can improve the quality of the sine wave, which can be used for many household applications. Here the design analysis & evaluation of the single-phase inverter & its control is carried out using MATLAB software.AC output is derived from the DC input by switching inverter sequence. A robust controller SMC is used here as it has high stability in a wide range of operating conditions.**

1. INTRODUCTION

Nowadays, single phase pulse width modulation inverters are used in many household applications like uninterruptible power supply (UPS's) for the purpose of supplying non-linear loads and critical step loads and driving induction motors. The SPWM uses DC as input and the AC output is derived from it. For the purpose of obtaining the AC output we are using the inverter switches like MOSFET for the switching operations.

Recently the inverters are taking part in vital role in numerous renewable energy applications as they're used for grid affiliation of wind energy system or electrical phenomenon system.

The PWM technique is an advanced and useful technique in which the width of the gate pulses are controlled by various gate mechanisms. The PWM inverter is used to keep the output voltage of the inverter at the rated voltage (depending on users choice) irrespective of the output load. In conventional inverter the output voltage changes according to the changes in the load.

Here in this model the discontinuous control quantity, duty ratio of switches is approximated and modeled by a continuous variable supply over a number of switching cycles. In this project a fixed frequency continuous-time sliding mode controller is proposed. The control signal is generated by applying a signal to a hysteric comparator, which is a function of output current, output voltage and capacitor current. Fixed-frequency switching mode inverters are more suitable to be represented by discrete-time state equations.

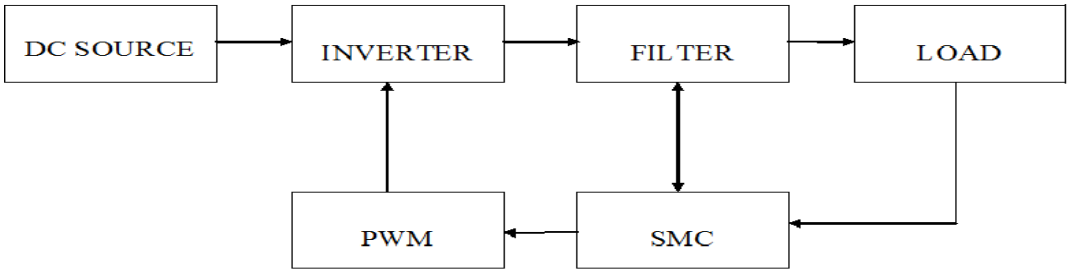

Figure 2.1: Block diagram of power electronic system

This project focuses on the modeling and simulation of unipolar single-phase pulse width modulated inverter using sliding mode control. An inverter is a circuit that derives an AC output from a DC source. Pulse Width Modulation is technique used to decrease total harmonic distortion in the inverter circuit. Sliding Mode Controllers are renowned for their stability and robustness. The controller is employed to operate at an infinite switching frequency so that the controlled variables will be able to track a reference path to achieve the desired dynamic response and steady state operation. Otherwise extreme high-speed change in power converters leads to change losses, inductance losses, electrical device core losses and magnetic attraction interference noise problems. Here, a fixed frequency and high-performance controller is proposed. In order to fix the switching frequency and to generate required switching law for the four-switch inverter, a pulse width modulator is employed. The unipolar pulse width modulator is implemented with a resistive load and simulated in MATLAB.

2. SLIDING MODE CONTROLLER

Sliding mode controller (SMC) is well known for its robustness, stability, and good regulation properties in a wide range of operating conditions, moreover it is not necessary to use average model of the inverter. According to SMC theory, the main subject of the power converter control in the definition of a good sliding surface and switching condition to guarantee the output voltage regulation with low THD in different conditions.

The Sliding mode supervisor (SMS) systems are designed to drive the system states on to a particular surface in the state space i.e. the sliding surface. Once the sliding surface is reaches, SMC keeps the states on the close neighborhood of the sliding surface hence the SMC is a two part controller design where the first half involves the planning of sliding surface in order that sliding motion satisfies the planning specification and therefore the second half thinks about with the choice of control law which is able to make the change surface enticing to the system state.

There are two main advantage by using SMC in our project, Mainly the dynamic behavior of the system may be tailored by the particular choice of the sliding function.

Further, the closed loop response becomes totally insensitive to some particular uncertainties. Thus, The SMC allows for controlling nonlinear process subject to external disturbances and heavy model uncertainties.

In this paper, supported SMC theory, a set frequency and high performance controller is projected to use to unipolar single phase inverters.

3. SIMULINK MODEL

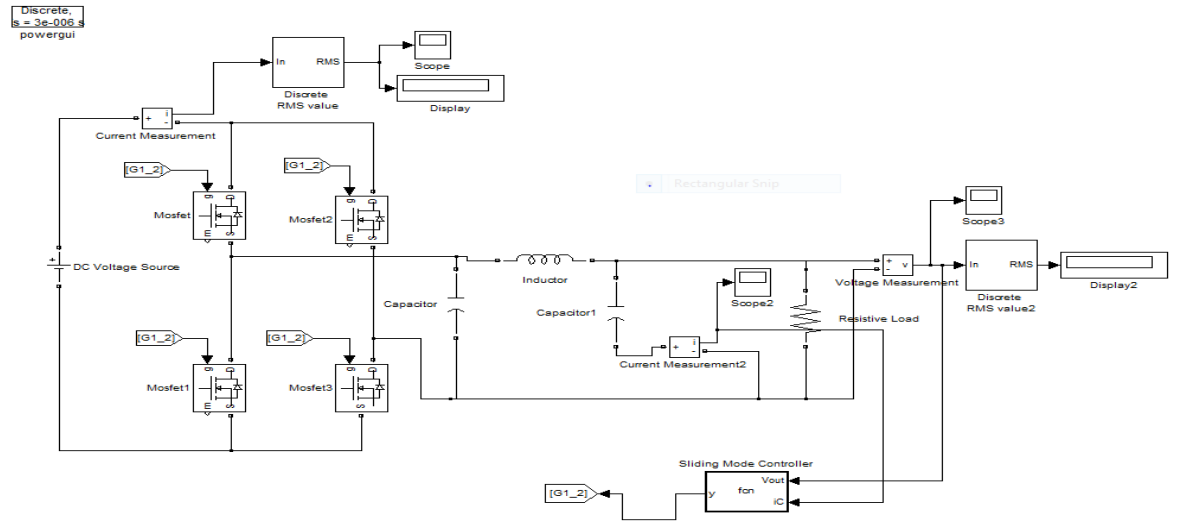

Figure 4.1 Simulink model

The simulink model of the SPWM using SMC is shown in the above figure .It consists of four switching devices i.e 4 MOSFET's which acts as the inverter. The DC supply which is given to the switching inverter is converted into AC provided with the RC filter to reduce harmonics. Here we are using resistive load, from the filter the SMC is connected to minimize the further harmonics or errors that are being produced. Thus, we can obtain a pure sinusoidal waveform with reduced errors

4. RESULT

As the main aim of the project is to obtain the pure sine wave with least harmonics. Finally by using the concept of SMC theory the pure sine wave is obtained by simulation and modeling of the SPWM with SMC in MATLAB software and the output result obtained is as shown below.

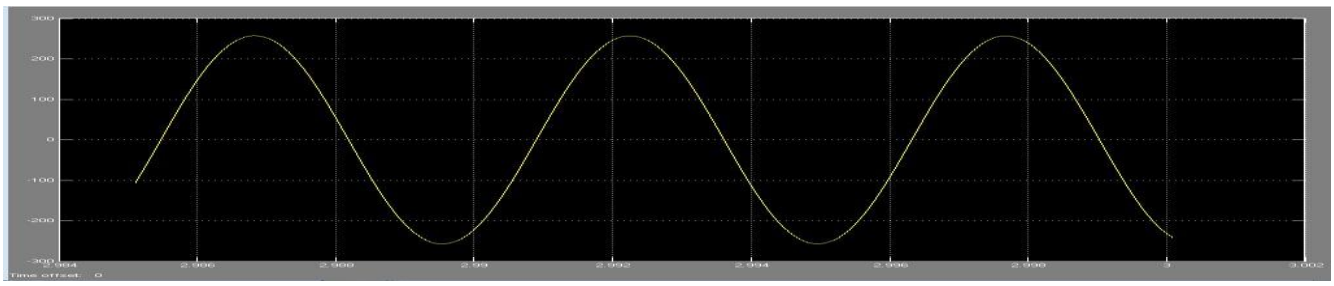

Figure 5.1 Output voltage waveform

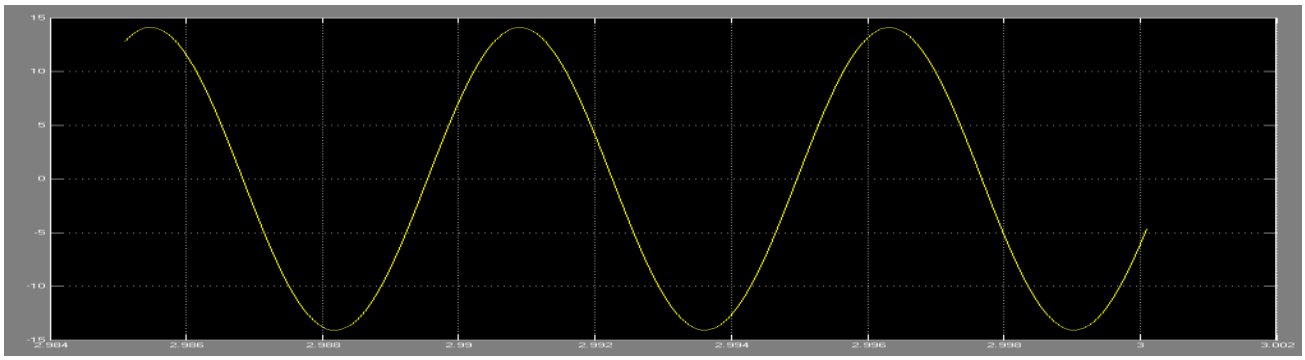

Figure 5.2 Output current waveform

5. CONCLUSION

The use of normal sampling PWM is that the common technique to be enforced in digital technique's with unipolar voltage switching scheme has higher harmonic profile compare to Bipolar voltage switch. Because of that, SPWM with unipolar voltage switching can use as a switching theme for the one section electrical converter. This has reported a successful application of a sliding mode controller to control a PWM inverter. It is shown that the sliding mode controller can give good responses in both kinds of load. Hence in this project by utilizing the combined work of SMC and SPWM inverter we had obtained a better harmonic profile in the sine wave with reduced switching noise.

REFERENCES

1. Fossas and Ras, 2002 **"Second order sliding mode control of a buck converter"** in Proc. 41st IEEE Conf. Decision Control, pp. 346– 347.

2. Rech, Pinheiro, Gr¨undling, Hey, and Pinheiro, 2003. **"A modified discrete control law for UPS applications"** IEEE Trans. PowerElectron., vol. 18, no. 5, pp. 1138–1145, Sep.

3. Low, Zhou, and Wang, 2004 **"Digital odd harmonic repetitive control of a single-phase PWM inverter"** in Proc. 30th Annu.Conf. IEEEInd.Electron. Soc., Busan, Korea, No. 2–6, pp. 6–11.

4.Zhang ,Kang ,Xiong , and Chen , 1999 **"Deadbeat control of PWM inverter with repetitive disturbance prediction,"** in Proc. 14th Annu.Appl.Power Electron. Conf. Expo, pp. 1026–1031.

5. Abdel-Rahim and Quaicoe , 1996 **"Analysis and design of a multiple feedback loop control strategy for single-phase voltage-source ups inverters,"** IEEE Trans. Power Electron., vol. 11, no. 4, pp. 532– 541.

6. Wang, Liu, Zhang, Gong, and Ma, 2009 **"Modeling and analysis of hysteretic current mode control inverter,"** in Proc. 24th Annu. IEEE Appl.Power Electron. Conf. Expo, pp. 1338–1343.