Condition Monitoring System for Paralyzed Persons based on Brain Computer Interface

[1]Akhil Murali, [2]Midhun S, [3]Eldo P Elias

Mar Athanasius College of Engineering
Department of Computer Science and Engineering, Kothamangalam, India

***Abstract*: The human brain is made up of millions of interconnected neurons. The pattern of interactions between these neurons are represented as emotional states. Every interaction between neurons creates a minuscule electrical discharge and these and these charges can be measured outside the skull. The activity created by hundreds and thousands of concurrent discharges aggregate into waves which can be measured. These brain waves can be processed to extract useful information regarding the activities of the brain. Signal are captured using a sensor placed in the FPI position of the brain and the obtained EEG signals are processed to provide instant values of alpha, beta, theta and gamma. The values are compared, tested and learned using Support Vector Machine Learning Algorithm (SVM) with Dataset, then the current emotions such as happy, sad, pain, normal, sleepy and hunger is displayed in an Android Application which is provided with a bystander and in cases of extreme pain the bystander or the relatives can be alerted so that they can make easy decisions.**

Keywords: EEG, SVM, FPI Position

I. INTRODUCTION

Help is not a verb, it is a promise. There are so many people who are marginalized by others in this world. Physically challenged persons are some of them. The system introduces a revolutionary technology that can assist paralyzed people around the world**..** As per the creating innovation and minimal effort Brain-Computer Interfaces (BCI), mind waves can undoubtedly be obtained. Initially, BCI was produced for restorative purposes; it enabled the physically crippled individuals to control their appendages by means of cerebrum waves. What's more, scientists offered endeavors to recognize Attention Deficit Hyper-action Disorder (ADHD) [11] utilizing Electro Encephalo Graphy (EEG) signals. These days, numerous instructive frameworks have been actualized through the BCI utilizing mind waves. Recent thinks about have demonstrated the significance of the job of feelings to decide. All the more as of late, getting to physiological reactions has pulled in consideration in acknowledgment of the enthusiastic states, dissimilar to regular techniques that utilization sound-related and visual highlights. All BCI applications may be improved by including feeling detecting and using passionate data in basic leadership. EEG is the chronicle of the bioelectric action that happens in the cerebrum amid various physical and compound exercises of the mind. The mind produces signals having a wide assortment of recurrence and adequacy esteems relying upon the condition of the individual alert, snoozing, or the temperament of the individual. EEG signals are not intermittent, their sufficiency and stage are always showing signs of change. Cerebrum influxes of EEG signals are separated into five principle recurrence groups: delta theta, alpha, beta and gamma. Low recurrence groups are related with rest, unwinding and contemplation. High recurrence groups are related with consideration, data handling and agony. These exercises are identified with the limbic framework. Feelings are connected with the whole sensory system however the limbic framework is particularly critical. It incorporates thalamus, nerve center, hippocampus, amygdala, and a few other close-by regions as appeared in Fig 1 . For example, gamma waves empower to restricting instrument in the thalamus where complex capacities are completed. Similarly as we can foresee the activities per-shaped on the processor by tuning in to the power supply of the PC, we can likewise comprehend what tasks are done in the cerebrum with EEG information.

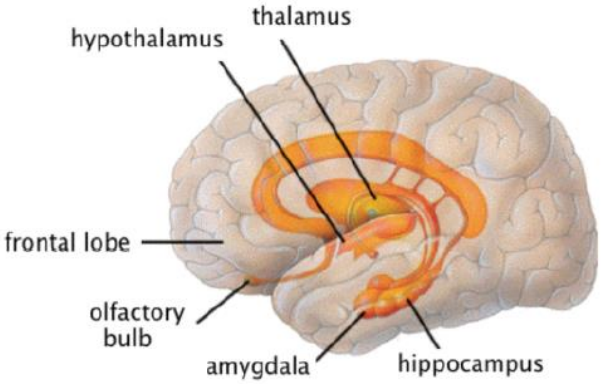

Fig 1: Human Brain

To design an efficient and user friendly communication system for persons who are completely paralyzed resulting in inability to communicate in any way even though they would be like to be fully conscious and aware of the surroundings. These situations are frustrating, not only for the patients but also for their bystanders, medical practitioners and loved ones.This system allows these bystanders or medical practitioner know the mental states and emotions of the patients such as whether they are happy, sad, pain, sleepy and hungry.

II. LITERATURE SURVEY

A large no people are suffering from the complete paralysis where their all motor functions are completely or partially stopped. But these persons are completely awake but they are unable to express their feelings or emotions.

Different methods for emotion recognition includes Facial expression analysis, Gesture analysis, Natural language processing and Brainwave Analysis. As concerned with a fully paralyzed person whose muscular and limb movements are highly restricted. The only possible option for such persons for communication are brainwave analysis. The proposed system extracts and analyzes the brain waves of the patients to recognize their emotions and feelings and convey the results.

The literature overview of this research covers a variety of aspects mainly from two domains:

1) General usage of portable EEG-based applications.

2) Emotion recognition applications.

A. General usage of portable EEG-based applications.

The BCI application created by Rani and Umamakeswari [1] gives safe treatment of deadened patients utilizing wheelchairs. The application empowers to control the wheelchair utilizing alpha and beta waves in the patient's mind. Furthermore, the patients can turn the wheelchair to one side or to one side utilizing their flicker. Visu et al. [2] proposed a framework utilizing cerebrum signs to avert mishaps brought about by dozing drivers. The framework, which utilizes the theta and alpha waves, identifies when driver is resting and modifies the speed of the vehicle by turning control over to the computerized framework. This keeps the mishap that may happen if there should arise an occurrence of a conceivable sleepiness. An examination by Kan, Lim and Lee [3] built up an application for the recognition of distractibility. This examination was tried on a gathering of undergrad building understudies. Because of these tests, it was seen that the dimension of consideration of the young ladies was higher than that of the young men. It has likewise been discovered that visual things increment the dimension of consideration more than sound-related things and pragmatic activities. Bonaci and her associates [4] planned to guarantee the wellbeing of individuals' close to home information in BCI applications. Bonaci and his associates, epitomizing the capacity to confine access to applications on cell phones, have proposed a model that conceals this information to restrain access to spyware in close to home applications.using diverse AI calculations, for example, Random Forest, Boosting, Chan et al. [5] have attempted to decide cerebrum state (dynamic, rest) with EEG information by utilizing diverse AI calculations, for example, Random Forest, Boosting, k-Nearest Neighbors (KNN) and Support Vector Machine (SVM). Because of this investigation, they found that the Random Forest calculation had the most astounding execution rate to distinguish the condition of mind. What's more, and his partners have built up a BCI application that enables them to utilize the mouse cursor utilizing a solitary channel EEG gadget [6]. Utilizing this application, it is conceivable to move the mouse pointer to the ideal point by basically winking. Through this application, it is expected to make it workable for individuals with physical incapacities to utilize the PC easily. Kumar et al's. work is an extraction of highlights through the 'NeuroSky Mindwave' item. In this , a method has been realized which enables different states of the brain to be detected with the algorithm developed on OpenVibe.

In a study by Morales and colleagues, a low-cost open-source software and navy design has been proposed that enables remote observation of EEG data [8]. EEG data can be transferred to the web server via hardware and made available online via the server. In the study conducted by Gonzalez et al. [9], three levels of computer programming (code writing, document preparation and debugging) were measured using the low cost EEG device. There is a statistically significant concentration difference between writing code and debugging but this is not the case for document preparation.

In spite of the fact that many researchers have worked for recognition of emotions from the brain waves, the classification results are rather unsatisfactory. An emotion recognition system based on a neural network got a classification accuracy of 64%. Moreover, few research papers have used one electrode device for emotion recognition because single-channel EEG devices are recently introduced. In addition, one electrode devices are affordable and easy to use. The most similar work to ours has used classification on two classes between relaxation and fear emotions with an average accuracy of 92% using a Support Vector Machine (SVM) based classifier [10]. They recorded EEG data while test subjects were watching a video clip, which includes three emotional states: neutral, relaxation and scary. After that, they classified horror and relaxing movies. Although they have excluded the parts of horror movie that did not carry any fear emotion, our research will keep the movie's integrity. In the literature, there are few studies on real-time emotion recognition with EEG signals.

B. Emotion recognition applications

EEG-based emotion recognition has been used frequently in recent years in the development of human-computer interface systems. In these studies, researchers have tried to reveal the emotional situations of the persons with a stimulus. These stimuli can be visual, auditory or both. In recent years, some researchers have selected visual stimuli as emotion inducers in their work and used pictures as stimuli. In addition, video clips including visual and auditory stimuli have been widely used in previous studies. In the literature, there are different approaches to emotion recognition. Both low frequency bands and high frequency bands can be used for determining the emotional states. In addition, some researchers claim that the significant information to detect an emotional state is found in the frequency below 30 Hz. Nevertheless,this research showed the importance of the gamma wave which is above 30 Hz. Also, previous works state that the gamma wave indicates emotional consciousness of a person

III. EXISTING SYSTEM

Automated Paralysis Patient Health Care Monitoring System by Deepasri.T Gokulpriya.M Arun kumar.G Mohanraj.P Mrs.M.Shenbagapriya uses temperature, heartbeat respiration to monitor conditions of the patients and In case of emergency caretakers are alerted via a GSM module.

VIWA by Taher Bodaghi, Mohammad Reza Karami and Hamid Jazayeriy, a Computer interface device for paralyzed people using breath pressure. Breath pressure is measured by using sensor and translates it to location coordinates in computer display screen.

IV. PROPOSED SYSTEM

Biological signal generated by the brain is captured by neurosky mindwave headset which is placed in the forehead. Mainly five values are obtained from headset they are alpha, beta, gamma, attention and meditation. These mindwave generated values are forwarded to computer via bluetooth. Here we use machine learning algorithm to predict person's present condition. This prediction is performed using Support Vector Machine Algorithm. The present condition is updated to mobile application which the caretaker of person can observe in real time. In case of emergencies we have a responsive alarm system that will inform the person nearby as well as by mobile phone. Overview of the system is shown in Fig 2 and the detailed module wised functional diagram is shown in Fig 3.

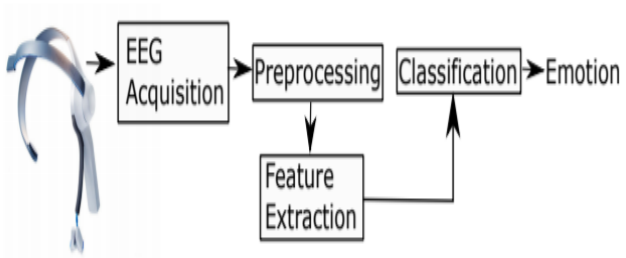

Fig 2: Overview of System

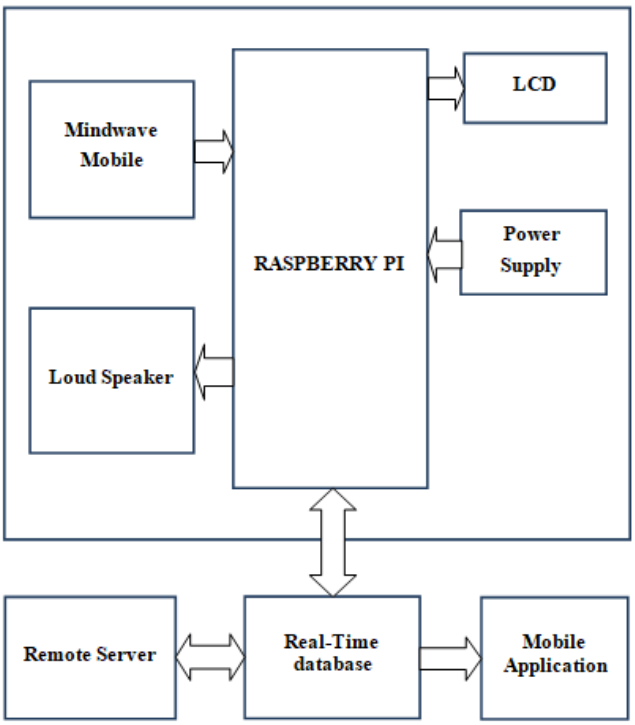

Fig 3: Hardware Architecture of Proposed System

V. ELECTROENCEPHALOGRAM ACQUISITION

In this work, we have focused our attention to use of a one electrode EEG device. As shown in Fig, using one electrode device we are able to capture the electrical signals in the brain. Sensor arm of this EEG device is located on the frontal lobe (FP1). The ground and reference electrodes are placed on the earlobe (A1). Gel was not used because all electrodes were in particular settings of dry type. This device measures the EEG power spectras (delta, theta, alpha, beta, and gamma waves) and eSense meters (attention and meditation). The device has an output of 12 bit raw-brain waves with a sampling rate at 512Hz. EEG analysis involves measuring amplitudes (powers) of activity in certain frequency ranges, so-called bands. ThinkGear that allows the measurement.

A. Signal Acquisition

For the collection of EEG data for the system 8 volunteers with a mean age of 21-22 are selected. The conditions to be predicted are set to Happy, Pain, Hungry, and Sleepy. In order to measure and record the EEG for Happy one minute videos clips that generate happy feeling in the volutiers are selected and the EEG reading at corresponding points are recorded. The hungry feel is induced by restricting the volutiers from taking food for 6 hours and showing food related videos. The pain is induced by asking the volutiers to hold a tumbler and heating the tumbler upto maximum time before hurting themself and EEG signals at the point just before giving up are recorded. Now for the EEG signals during sleepy condition The EEG signals are recorded when the volunteers are sleepy. All EEG signals were recorded after following standard clinical procedures.

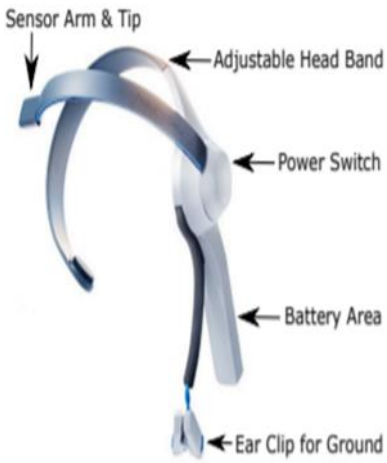

Fig 4 : Neurosky Mindwave Headset

VI. PREPROCESSING OF EEG SIGNALS

The data containing Not Available (NA) information are deleted because subjects blink, as shown in Fig. 4. High-noise data was discarded. The artifacts and noise produced in the system can be removed by applying data windowing and the binary logarithm to the data sequence. The elimination of weak signals was also carried out at this stage. The weak signal elimination operation was performed based on the data indicating the correctness of the incoming signal provided by the device. After preprocessing operation, we investigated the EEG power spectrums (delta, theta, alpha, beta, and gamma waves) and eSense meters (attention and meditation) with different classification methods.

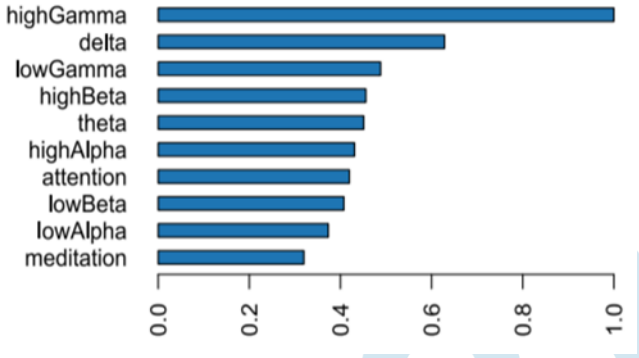

Fig 5: Sample Data

VII. FEATURE EXTRACTION

The all output of the Mindwave mobile headset is used as the features for the classification. The features include delta, theta, low alpha, high alpha, low beta, high beta,low gama, high gama, attention and meditation values as shown in Table 1.

	subject	attension	meditation	delta	theta	low alpha	low beta	mid gama	low gama	state
0	5	30	68	699451	553467	57628	59274	829	117	1
1	3	26	56	691648	585308	52621	58986	903	551	1
2	5	23	79	674660	559631	56052	53548	866	263	1
3	3	21	40	684872	526581	52473	55836	537	554	1
4	4	30	23	628331	580640	51413	57535	787	313	1
5	1	20	22	619064	568789	54426	59091	654	243	1
6	7	31	18	615376	539568	56880	50896	868	426	1
7	1	13	66	634880	589038	58243	50188	533	428	1
8	7	15	39	619903	552852	54848	52553	802	589	1
9	5	25	59	606259	528897	51652	58150	723	233	1
10	4	27	30	692279	527588	55948	59861	500	92	1
11	0	13	29	693918	519395	55197	56600	519	541	1

Table 1: Sample Dataset

VIII. CLASSIFICATION & RESULTS

A. Support Vector Machine (SVM)

Support vector machines area type of supervised machine learning algorithms for classification and regression. The training data is scattered across the feature space or hyper plane and the best separating hyperplane is found and a model is build based on the hyperplanes which separates various classes. The new examples are assigned a label based on this model. Here only the best supporting hyper planes aka the hyperplane which has a largest width as possible. The new instances are mapped to the feature space and are labeled based on to which position they are mapped.

	Precision	Recall	f1 Score	Support
1	0.94	0.87	0.91	39
2	0.85	0.85	0.85	46
3	0.78	0.81	0.79	31
4	0.85	0.89	0.87	44

Table 2: Result of SVM Classification

The accuracy using SVM is found as 85.625%

B. K Nearest Neighbors (KNN)

KNN is a supervised classifier which is non parametric in nature. It classifies test cases based on the nearest neighbors. K nearest samples are found using appropriate distance metric and the most common label is assigned to the test case. The distance metric used can be of various type like Euclidean distance, Manhattan distance and cityblock distance. Euclidean distance is used in this work

	Precision	Recall	f1 Score	Support
1	0.90	0.90	0.90	39
2	0.82	0.72	0.77	46
3	0.70	0.97	0.81	31
4	0.97	0.84	0.90	44

Table 3: Result of KNN Classification

The accuracy using KNN is found as 84.375%.

So the model trained using SVM classifier is used for the final system.

IX. CONCLUSION

The proposed system aims at recognizing the mental conditions of a fully paralyzed person. The system uses low cost Neurosky Mindwave Mobile EEG head set for capturing the EEG data. This data is preprocessed and fed to a nearby Microcomputer by means of bluetooth where the current condition of the patient such as pain, happy, hungry, sleepy and normal. The current status is conveyed through low cost methodologies like LCD display, loudspeaker and an android mobile application. The proposed method will be a great help for fully paralyzed persons and to and their relatives or persons responsible for their assist. It is a highly cost effective and fast response system that can be installed and used with ease.

References

[1] Rani, B. J. A., Umamakeswari, A. (2015). Electroencephalogram-based brain controlled robotic wheelchair. Indian Journal of Science and Technology, 8(S9), 188-197.
[2] Visu, P., Varunkumar, K. A., Srinivasan, R., Kumar, R. V. (2016). Brainwave based accident avoidance system for drowsy drivers. Indian Journal of Science and Technology, 9(3).
[3] Kan, D. P. X., Lim, V. W. W., Lee, P. F. (2015). Signal Conversion from Attention Signals to Light Emitting Diodes as an Attention Level Indicator. In 1st Global Conference on Biomedical Engineering 9th Asian-Pacific Conference on Medical and Biological Engineering (pp. 251-255).
[4] Bonaci, T., Herron, J., Matlack, C., Chizeck, H. J. (2014, June). Securing the exocortex: A twenty-first century cybernetics challenge. In Norbert Wiener in the 21st Century (21CW), 2014 IEEE Conference on (pp. 1-8).
[5] Chan, A., Early, C. E., Subedi, S., Li, Y., Lin, H. (2015, November). Systematic analysis of machine learning algorithms on EEG data for brain state intelligence. In Bioinformatics and Biomedicine (BIBM), 2015 IEEE International Conference on (pp. 793-799).

[6] Ang, A. M. S., Zhang, Z. G., Hung, Y. S., Mak, J. N. F. (2015, April). A user friendly wearable single-channel EOG-based human-computer interface for cursor control. In Neural Engineering (NER), 2015 7th International IEEE/EMBS Conference on (pp. 565-568).
[7] Kumar, S., Kumar, V., Gupta, B. (2015, September). Feature extraction from EEG signal through one electrode device for medical application. In Next Generation Computing Technologies (NGCT), 2015 1st International Conference on (pp. 555- 559).
[8] Morales, J. M., Díaz-Piedra, C., Di Stasi, L. L., Romero, S. (2015, June). Low-cost Remote Monitoring of Biomedical Signals. In International Work-Conference on the Interplay Between Natural and Artificial Computation (pp. 288-295).
[9] Gonzalez, V. M., Robbes, R., Gongora, G., Medina, S. (2015, August). Measuring Concentration While Programming with Low-Cost BCI Devices: Differences Between Debugging and Creativity Tasks. In International Conference on Augmented Cognition (pp. 605-615).
[10] Jalilifard, A., Pizzolato, E. B., Islam, M. K. (2016, October). Emotion classification using single-channel scalp-EEG recording. In Engineering in Medicine and Biology Society (EMBC), 2016 IEEE 38th Annual International Conference of the (pp. 845-849).
[11] ADHD assessment and testing system design based on virtual reality- Hansey Lee Youdi Li Shih-Ching Yeh Yanyan Huang Zhengyu Wu Zanli Du.
[12] REAL-TIME EMOTION RECOGNITION FROM EEG SIGNALS USING ONE ELECTRODE DEVICE, M.Sc. THESIS Mehmet Ali SARIKAYA Department of Computer Engineering, Computer Engineering Programme ISTANBUL TECHNICAL UNIVERSITY GRADUATE SCHOOL OF SCIENCE ENGINEERING AND TECHNOLOGY