ANALYSIS OF DC-DC CONVERTERS FOR RENEWABLE ENERGY SYSTEMS

Mr. Hanumanthappa P [1], Mr. Sagar B [2], Prof. Nagaraj Bodravara[3], Prof. Nandish B.M [4]

[1, 2]UG Students, [3,4]Assistant Professor
Department of EEE, JIT, DVG

***Abstract*: As the conventional resources are depleting nowadays, one of the best way is to use the renewable energy resources which are freely available in nature which helps in enhancing the electricity from these resources. Here in this project, we are using the photovoltaic system which uses solar energy which is abundant and pollution free and one hindrance is that its high installation cost and low conversion efficiency. Hence our aim here is to increase the efficiency and power output of the system. One of the major requirement today is that the constant voltage should be supplied to the load irrespective of variation in solar irradiance and temperature. The PV arrays used here consist of parallel and series combination of PV cells which are used to generate electrical power depending on the atmospheric conditions. Thus there is necessary to couple the PV array with boost converter. In this project, the system is designed in such a way that as the load varies the change in input voltage and the power fed into the converter follows the open circuit characteristics of PV array. This system can be used to supply constant stepped up voltage to DC loads.**

2. INTRODUCTION

Electricity is one of the major requirement for the survival of the human and also for the growth of any nation. But the fact is that the electricity is not directly available from the nature it needs to be converted from other sources of energy which may be renewable (solar, wind, fuel cell) or non-renewable (fossil fuel). Most of the electricity generation in India about 88.4% is done by the non renewable resources mainly the fossil fuels. The world energy forum has predicted that the fossil based oil, coal and gas reserves will be exhausted in the future that is in less than 10 decades which creates the shortage of energy in the coming days and also the less environmental pollution. Thus protecting the energy and the environment has become the major concern by promoting the renewable energy technologies.

The renewable energy sources can also be called as the non-conventional energy sources which are continuously replenished by the natural process. Such as the solar energy, bio-energy, bio-fuels, wind energy, and hydro power etc. A renewable energy system converts the energy found in sunlight, falling water, wind, sea waves, geo-thermal heat or biomass into the electrical energy. The majority of the electricity comes from the sun and the wind directly or indirectly.

Here we are using the solar PV based generation which are more advantageous than its drawbacks. The solar photovoltaic cell converts the energy from the sun directly into the electricity without any pollutant emission products. This generation is effected by the physical and environmental parameters like solar radiation and cell temperature on the PV cells. The PV power is supplied to the utility grid is having more attention, hence various standard mentioned by the different grid monitoring authorities should follow. This standard deals with the issues of power quality, detection of islanding operation, DC current injection etc.

Enormous inverter circuits and control schemes are used for PV conditioning systems (PCS). For residential PV power generation systems, single phase utility interactive inverters are preferred as the power level required is lower than 5kW and a high input voltage stack that provides a DC voltage around 400V. A DC-DC converter with either step up or step down function is needed before the DC-AC inverter stage.

Here in this project, a buck boost type DC-DC converter is proposed as the first stage with the regulated output inductor current and the full bridge unfolding circuit with 50 or 60 Hz line frequency is given to the DC-AC stage which in turn unfold the rectified sinusoidal current regulated by the DC-AC stage into a pure sinusoidal current As the circuit runs either in boost or buck mode, the first stage is very efficient if the low conduction voltage drop power MOSFET and ultrafast reverse recovery diode are used .For the second stage, as the unfolding circuit only operates at line frequency and switches at zero voltage and current ,the switching losses are omitted thus the only loss is due to conduction voltage drop which can be minimized by using low on-drop power boost DC-DC converter operating with high frequency switching all the time in the proposed system, thus the efficiency can be improved .also as there is only one high frequency power processing stage in this complete PCS, the reliability can be greatly enhanced.

3. SIMULINK MODEL

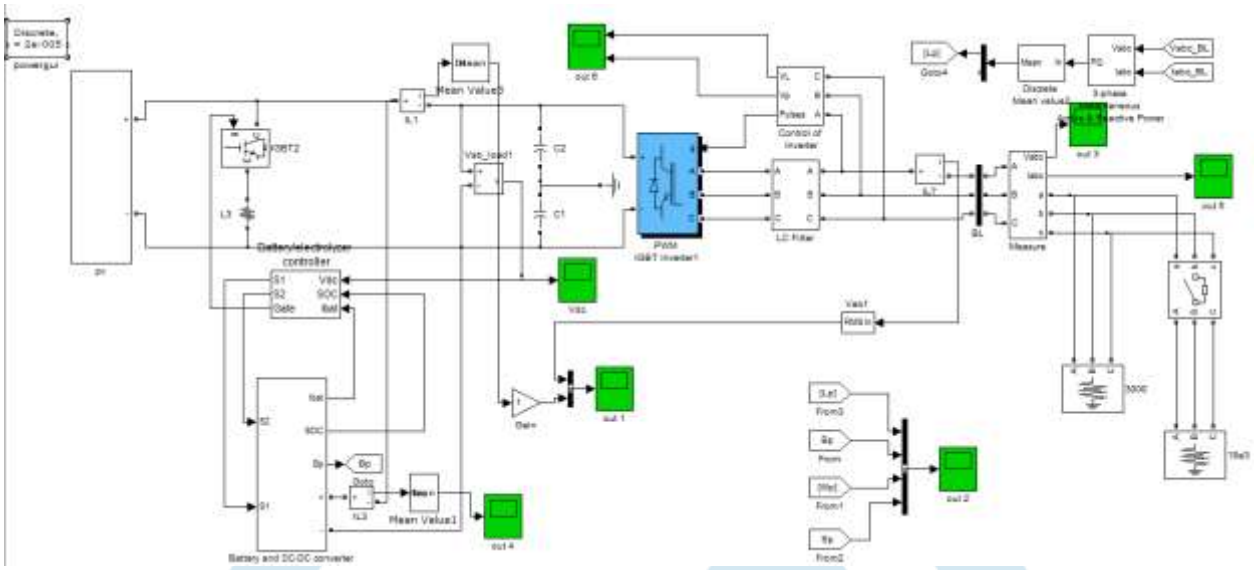

Fig 3.1 simulink model

The simulink model of the project is shown in the above figure 3.1 The simulink model consists of PV array panel, DC-DC converter, inverter, and LC filter , MPPT controller. Here the PV cell absorbs the light energy from the sun and the separation of the negative and positive charge carriers takes place in order to produce electric current that flows in one direction across terminals that have a voltage difference. Solar cells perform these tasks with their semiconducting materials. The obtained output is constant thus we are using the DC-DC converter i.e the buck-boost converter which helps to convert the voltage level. In case if the voltage is low it operates in boost mode which helps to rise the voltage level and if the voltage is high it operates in the buck mode which lowers the voltage level. The operation of the buck boost converter depends on the gain produced by the PV panel. Thus we can infer that if the gain is high the dc-dc converter operates in boost mode or if the gain is low it operates in the buck mode. So we are using Buck-boost converter instead of buck or boost converter as we can obtain the high efficiency.

Here we are also using the MPPT controller in order to ensure that the photovoltaic modules always act supplying the maximum power as possible and dictated by ambient operating conditions, a specific circuit known as Maximum Power Point Tracker (MPPT) is employed. Thus we can obtain the constant DC voltage at the output which can be utilized for household applications or many other applications where there is necessary of constant supply of the voltage.

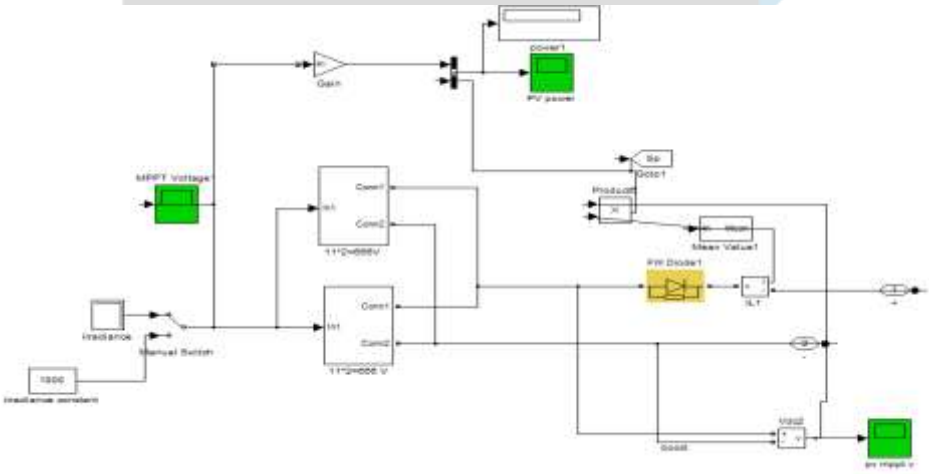

Fig 3.2 PV array model

4. RESULT

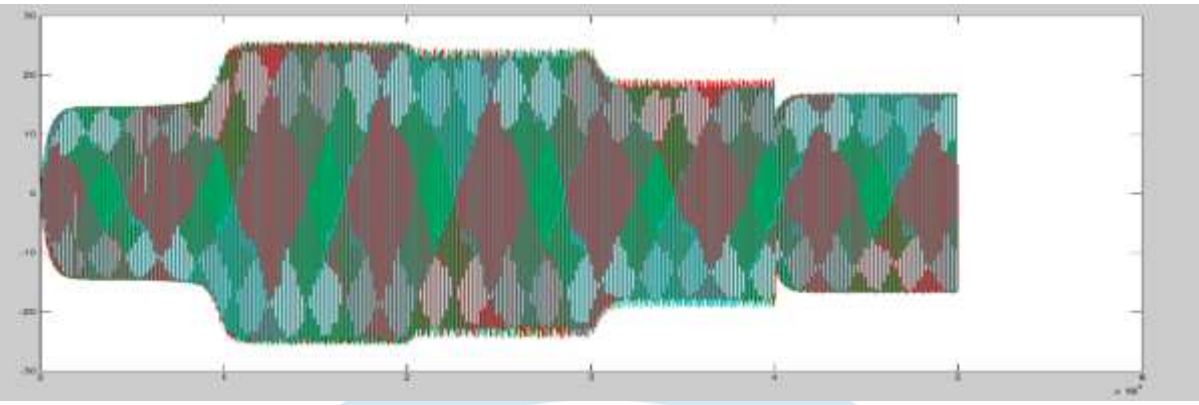

Fig 4.1 : Output current waveform

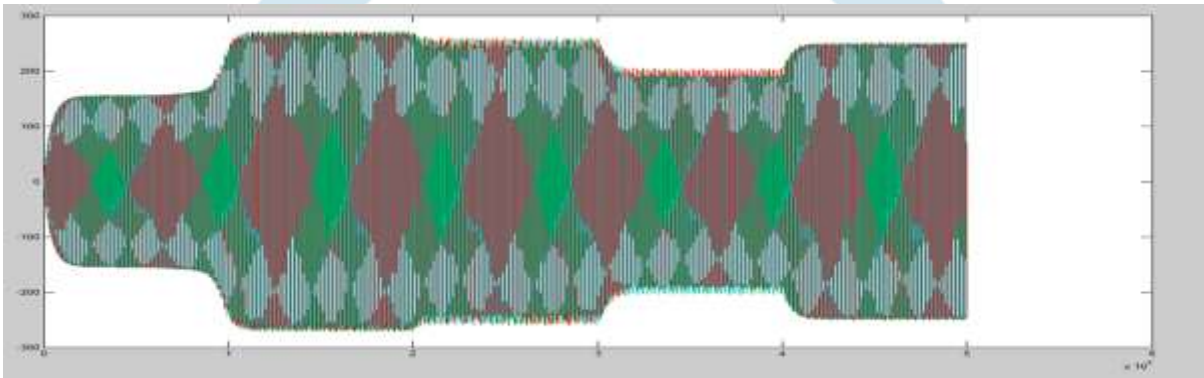

Fig 4.2 : output voltage waveform

5. CONCLUSION

Here this project includes the basic research into the solar energy scenario in India around the world. Here we are analyzing the single-phase, single stage high power quality buck-boost converter which is based on the transformerless off-grid PV inverter. The first part here is either boost or buck mode thus it avails a wide input voltage range which is good for PV application. The second part is the inverter part which is composed with power frequency unfolding circuit based on the direction of the off grid reference signal. Here the concentration is given on the three distinctive techniques, MPPT controllers, Perturb observe method as well as incremental conductance method. Thus this method can give diverse sort of bends for the whole converter .It gives the best execution method using buck controller as it processes power either as a buck converter or a boost converter, high power quality can be achieved.

REFERENCES

[1] Kumar A., Kumar K., Kaushik N., Sharma S.,Mishra S. Renewable energy in India: Current status and future Potentials Renewable and Sustainable Energy Reviews. – Elsevier, 2010. – No. 14(8). – P.2434–2442.
[2] "All India Region wise Generating Installed Capacity of Power". Central Electricity Authority, Ministry of Power, Government of India. January 2013. http://www.cea.nic.in/reports/monthly/executive_rep/jan13/8.pdf
[3] "Monthly Generation Report (Renewable EnergySources) 2012-13 (August 12)". Central Electricity Authority, Ministry of Power, Government of India. http://www.cea.nic.in/reports/articles/god/renewable_ energy.pdf
[4] Energy Alternatives India (EIA) "Replacing Diesel with Solar" A comprehensive guide for Indian business. Updated: April 2012
[5] Electricity Act 2003:
http://www.powermin.nic.in/acts_notification/electricity_act2003/preliminary.htm Electricity Act,2003
[6] Y.T. Tan, D.S. Kirschen, and N. Jenkins, "A model of PV generation suitable for stability analysis," *IEEE Trans. Energy Conversion*, vol. 19, no. 4, pp. 748-755, Dec 2004.