Fabrication of Solar Power Reverse Osmosis System

[1]Prof. Praful Randhive, [2]Shalam M. Wasnik, [3]Sanju M. Nivesh, [4]Roshan D. Dharne, [5]Tushar Ghatole, [6]Shubodh B. Bhange

Department of Mechanical Engineering
Abha Gaikwad Patil Collage of Engineering, Nagpur

***Abstract*: Fresh water availability is essential for the economic development in small communities in remote areas. In desert climate, where naturally occurring fresh water is scarce, seawater or brackish water from wells is often more abundant. Since water desalination approaches are energy intensive, a strong motivation exists for the design of cost-effective desalination systems that utilize the abundant renewable energy resource; solar energy. This paper presents an optimization model of a solar-powered reverse osmosis (RO) desalination system. RO systems rely on pumping salty water at high pressure through semi-permeable membrane modules. Under sufficient pressure, water molecules will flow through the membranes, leaving salt ions behind, and are collected in a fresh water stream. Since RO system are primarily powered via electricity, the system model incorporates photovoltaic (PV) panels, and battery storage for smoothing out fluctuations in the PV power output, as well as allowing system operation for a number of hours after sunset. Design variables include sizing of the PV solar collectors, battery storage capacity, as well as the sizing of the RO system membrane module and power elements. The objective is to minimize the cost of unit volume produced fresh water, subject to constraints on production capacity. A genetic algorithm is used to generate and compare optimal designs for two different locations near the Red Sea and Sinai.**

Safe drinking water is the basic need of human beings. Microbial contamination of drinking water is a major health hazard, to overcome these we can use RO purifier for the clean and fresh water but the main problem in some village areas is that there is no availability of electricity for adequate time, because of which we cannot operate RO water purifier plant. Hence it will be end over with smart approach to get pure drinking water with the optimum use of renewable energy sources with our project.

INTRODUCTION:

The Earth is covered by 75% water, yet one of the world's greatest issues is a lack of drinking water. Every year, almost four million people die from water-related diseases and 98% of those occur in the developing world. In response to such a need, this idea is proposed to produce clean drinking water by reverse osmosis filtration by means of human power. The WHO estimates that 94 percent of these diarrheal cases are preventable through modifications to the environment, including access to safe water.

There are different modern method of water purification are ultra-violet light , reverse osmosis, granular activated carbon, water softeners, sediment filter etc.... Photovoltaic processes on the other hand convert solar energy directly into DC electricity. Commercial PV has less overall efficiency of solar energy conversion and higher cost per kilowatt-hour than large-scale thermal systems. However, for smaller scale systems, thermal-based electric power generation from solar energy is all but economically infeasible. Accordingly, the strongest interest in the literature for powering RO desalination systems via solar power, is via photovoltaic energy harvesting.

Suggested that a RO system may operate over a wide operating range of feed pressure and flow rate and, thus, operate with time-dependent energy sources, such as solar photovoltaic power. Although the optimal sizing problem of the RO desalination unit and energy sources was appropriately addressed, operational parameters, such as feed pressure and feed flow rate, of the RO desalination were not taken into consideration. all, various power systems were designed in order to minimize the energy consumptions for the operation of a RO desalination unit, which was designed by testing various configurations using the commercial software, ROSA. Once a RO configuration was determined to meet the water demand, the energy systems were designed.

LITERATURE REVIEW:

Pure water is very much essential to survive but nowadays the water is getting contaminated due to industrialization which leads to many water related diseases. Water can contain dirt, minerals, chemicals and other impurities that make it smell and taste bad. Filtering water can help purify water, removing these impurities and making it safe to drink, while often improving its taste. Reverse Osmosis is needed to remove Fluoride, sodium, total dissolved salts, or chemicals like arsenic, radium and nitrates.

In response to such a need, Reverse Osmosis Water Purification by Cycling Action is proposed to produce clean drinking water which uses human power to get pure form of water for drinking. The term water purification refers to a process, which selectively extracts pure water from an impure solution, leaving all kinds of impurities behind, regardless of their source or their nature

Objective and scope of the project: -

- RO is an effective method of reducing the concentration of total dissolved solids and many impurities found in water.
- Reverse Osmosis Water Purification by Cycling Action is proposed to produce clean drinking water which uses human power to get pure form of water for drinking.
- Reverse osmosis (RO) is a water purification process that uses a partially permeable membrane to remove ions, unwanted molecules and larger particles from drinking water.
- Water purification is an effective method of reducing the concentration of total dissolved solids and many impurities found in water.
- Water Purification by Cycling Action is proposed to produce clean drinking water which uses human power to get pure form of water for drinking.
- Water purification process that uses a partially permeable membrane to remove ions, unwanted molecules and larger particles from drinking water.

WORKING PRINCIPLE:

Osmosis is a natural process in which a liquid from a less concentrated solution flows through a semi-permeable membrane to a more concentrated solution. Pressure is applied on the more highly concentrated solution so that liquid flows from the higher concentrated solution to the lower concentrated solution. In this case the highly concentrated solution is dirty, undrinkable water. For this system, pressure is applied so that water molecules are forced through a 0.0001-micron semi-permeable membrane Reverse osmosis systems can often improve the quality of water. The reverse osmosis water treatment method has been used extensively to convert brackish or seawater to drinking water, to clean up wastewater, and to recover dissolved salts from industrial processes. It is becoming more popular in the home market as homeowners are increasingly concerned about contaminants that affect their health, as well as about non-hazardous chemicals that affect the taste, odour, or colour of their drinking water.

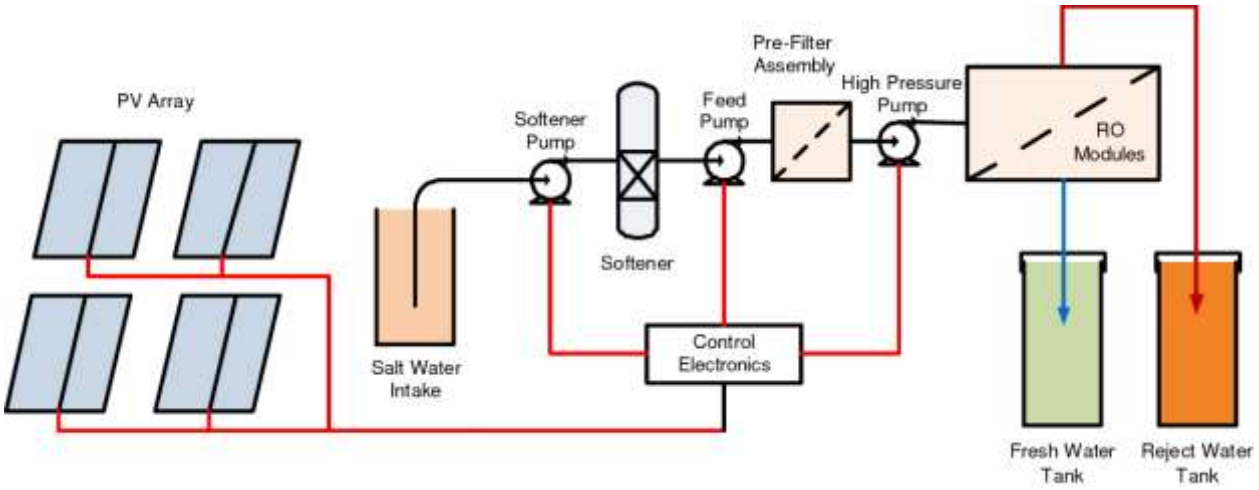

Solar Operated Reverse osmosis system

- **Reducing Concentration through RO**

Reverse osmosis treatment reduces the concentration of dissolved solids, including a variety of ions and metals and very fine suspended particles such as asbestos that may be found in water. Although RO membranes can remove virtually all microorganisms, it is currently recommended that only microbiologically safe water be fed into RO systems. Reverse osmosis is an effective method of reducing the concentration of total dissolved solids and many impurities found in water.

- **Reverse Osmosis Process**

In the reverse osmosis process a cellophane-like membrane separates purified water from contaminated water. Osmosis occurs when two solutions containing different quantities of dissolved chemicals are separated by a semi permeable membrane. Osmotic pressure of the dissolved chemical causes pure water to pass through the membrane from the dilute to the more concentrated solution. There is a natural tendency for chemicals to reach equal concentrations on both sides of the membrane.

The entire process of the design begins by adding salt water into the tank. All of the heavy sediment is immediately removed as the water passes through several layered mesh micron filters. The initial filtering step is crucial because the RO filter would quickly clog if it had to filter heavier sediments. The tank lid must then be sealed securely so that pressure can be built in the tank. To set the purification system in motion we need to begin pedalling the pedal. Since the pump mechanism is geared to minimize effort needed to operate it, the user feels little to no difference in having to power the pump system compared to pedal a bicycle.

The water then enters the four stages of filters in the RO system. The first stage removes any very heavy sediment down to five microns still left in the water that the first set of filters did not catch. The second stage removes any unwanted colour, taste, and odour. These two stages prepare the water for the most crucial step: reverse osmosis. Without these previous two filters, the RO membrane could easily be destroyed by certain chemicals that may be in the dirty water. The more filtered the water is before passing through the RO membrane, the longer the membrane will last. This third stage is the heart of the system as it removes all particles down to 0.0001 micron in size. The fourth and final stage is a repeat of the second stage, purely to optimize water quality. From here, the water exits the system as potable water and rinse water. It is important to note that only the purest water is used for drinking and that alone. The rinse water however can be used in many ways other than drinking, such as cooking, cleaning, or irrigation so that it never gets wasted.

- **RO MEMBRANE MATERIALS**

The most common RO membrane materials are polyamide thin film composites (TFC) or cellulosic types like cellulose acetate (CA), cellulose triacetate (CTA), or blends. Very thin membranes are made from these synthetic fibres. Membrane material can be spiral wound around a tube, or hollow fibres can be bundled together, providing a tremendous surface area for water treatment inside a compact cylindrical element. Hollow fibre membranes have greater surface area but are more easily clogged than the spiral wound membranes commonly used in home RO systems.

EFFICIENCY OF RO SYSTEMS

The performance of an RO system depends on membrane type, flow control, feed water quality (e.g., turbidity, TDS, and pH), temperature, and pressure. The standard at which manufacturers rate RO system performance is 77 °F, 60 pounds per square inch (psi), and TDS at 500 parts per million (ppm). The recovery rate, or efficiency, of the system is calculated by dividing the volume of treated water produced by the volume of water fed into the system:

Recovery % = Volume of treated water produced / Volume of feed water used

For an RO system to function properly, there must be enough water pressure. Although most home RO systems are rated at 60 pounds per square inch, the incoming feed fine pressure of many private water systems is less than 40 psi. The RO system must work against back pressure created in the storage tank as it fills with water and compresses the air in the tank.

The salt water is stored in the water tank. The salt water is taken to purifier arrangement by the help of pedal pump. The pedal is operated so that the pump operates. The pump wills the salt water from the tank to the first filter. Then the filtered water will be sent through the second filter automatically because of gravitational force. The first filter is the sedimentation filter and the second filter is the salt filter in which the salt from the water is removed and purified. After the filtering process takes place the filtered water is collected in the collecting tank. Here we use a pedal and chain drive to operate the pump to pump the water from low level to the high level for the filtering process. It is operated and human controlled. The purifier removes the dust and unwanted particles in water. The purification process is completed after the water is collected in a separate tank. The collected water may be used for further applications.

SCOPE FOR FUTURE WORK:

The future of the study of effective environmental engineering procedures is wide, optimistic and innovative. The optimism in research pursuits is universal amongst the scientific fraternity. Environmental engineering techniques such as membrane separation processes will be an eye opener of most of the scientific community. Man's as well as scientist's vision will pave way to greater acceptance of these path breaking procedures on the part of environmentalist's point of view. The membrane separation process particularly reverse osmosis and its success will open up avenues and applications for other membrane separation processes. Hope and vision will not be further behind and it will not be an illusion. The success of these procedures lies at the hands of the environmentalist and at the hands of the environmental engineer. Vision and success in this domain is slowly opening up windows of optimism and innovation in future years to come.

CONCLUSION:

The project carried out by us made an impressing task in the field of water purification method. This project has also reduced the cost involved in the concern. Project has been designed to perform the entire requirement task which has also been provided.

REFERENCES:

[1] International Journal of Latest Engineering Research and Applications (IJLERA) ISSN: 2455-7137.
[2] International Research Journal of Engineering and Technology (IRJET) e-ISSN: 2395-0056 Volume: 04 Issue: 07 | July -2017 www.irjet.net p-ISSN: 2395-0072.
[3] Atul.P.Ganorkar, K.S. Zakiuddin, H.A.Hussain, "An Experiment on Development of Pedal Operated Water Pump", IOSR, e-ISSN:2278-1684, (2014).
[4] Bryan Lee, "A Design of Simple Human Powered Water Pump", International Journal of Technology (2007).

TEXT BOOK

[1] Automation, Production Systems, and Computer Integrated Manufacturing by Mikell P. Groover
[2] A Textbook of Machine Design by R.S Khurmi, J.K Gupta
[3] Applied & Digital Electronics by P.K. Patil, M.M. Chitnis