POWER LOSS ELECTRICAL THERMAL BEHAVIOUR IN EV DRIVETRAIN SYSTEM

[1]Karishma JM, [2]Dr. Devi Vighneshwari, [3]Prof, Sumitha T L

Department of EEE
The Oxford College of Engineering, Bangalore

***Abstract*: The setbacks and warm showing of a converter is a critical point of view to improve converters with accomplishment like huge constancy and capability, expense-reasonability and high impact thickness. Influence incidents and warm improvement are all things considered compelled by change of electric limits in Interleaved help converter and Cascaded H-range staggered alternator. Battery-controlled electric vehicle advancement is uncommonly popular and obtaining importance. EVs furthermore implied as battery electric vehicles in this an electric motor is used as opposed to an internal combustion engine due to this there is likelihood of power setbacks. So to reduce the hardships by using powertrain structure in EVs interleaved assist converter and streamed H with traversing inverters are used. This advance structure be imitated in Mat lab/Simulink programming.**

***Index Terms*: Interleaved boost converter, 5-level cascaded H bridge multilevel inverter, Battery, Load, single phase inverter**

I. INTRODUCTION

To this stream time, battery-controlled electric vehicle advancement have life extraordinarily remarkable alongside getting outcomes. Specialists have being monetary arranging their full energy to make a helpful and solid powertrain structure. According to the course of action perspective, examining the going with specific in power hardware alternators: twisting release development and electromagnetic likeness, tremendous power part and high reliability is major. Semiconductor apparatuses are a basic piece of force electronic encoder. In the long run, wideband opening (WBG) semiconductors hold unrivaled substance property character and quality, and undeniably reasonable in colossal power EV applications when stood apart from standard silicon (Si) progression. At this point, advance toward producers and different assistants are further developing endeavors to speed up the cut of the pie of electric vehicles. The DC/AC alternator be an immense piece about this EV, while that drives this electric engine about this vehicle before controlling this battery power. This hardships along warm showing of a alternator is a huge perspective for the headway of alternator including performant components like huge resolute quality along capability, expense-feasibility and high impact thickness. The exhibiting approach in programming like LT zing preferably Saber, yet this huge issue considering this approach be gigantic calculational hour. The trading energies have being evaluated accompanied by the help of turn-on, switch off, along with rise along with fall times as long as the two Ids and Vds (MOS FET (channel source) stream along with voltage), by separating this electrical waveform season about this inverter's half platforms toward minuscule subintervals, along there after working out the change schedule for trading hardships. This electrothermal lead about this MOSFETs be settled utilize data sheet frames. this pattern, utilize Gaussian connection backslide (GPR) strategy, is made. That part work is applied for exploring this rising time along with fall time of the switches, along with capacitance of MOS FET shifts as demonstrated by the voltage-charge extent, so it clearly influences the trading setback. S inquiry table method be put in an application within reenactment into evaluate be trading along with on-state setbacks about IGBT semiconductors. That procedure gives an more modest, customized along with definite model about this semiconductors, as long as power electronic alternator assessment utilized standard computational time of CPUs. An warm amusement about IGBT component be planned through expect this replication about this edge work and that are necessary to improve the structure, for instance diminish the huge of the plan, increment the dependable, time to control off while scorching risks or lacks take place and besides to anticipate the most limit trading repeat, which depends upon crossing point temperature. Influence hardships and warm improvement are normally compelled by change of electrical limits, along impact mishaps are surveyed using the electrical stacking on contraptions and a short time later different through warm ideal for the period of convergence temperature of semiconductor gadgets. The steadfastness assumption for an influence rectifier be significant as long as pre-improvement, along with it depends upon this crossing point temperature, subsequently, influence disaster along warm remarkable amusement assessment be required accompanied by this architect. Restricted part strategy (FEM) perspective is used with the mix of speedy calculation time reenactment, and precision of the negligible warm model be affirmed before this connection of FEM examination along with certifiable assessments. Idle channels are represented as key for getting high-capability reaction through this rectifier, along with system huge, heaviness along with expense have being especially affected, consequently ideal arrangement is fundamental with the assortment of trading repeat. A state-space averaging not set in stone, and it is a feasible system for security assessment and controller plan.

II. METHODOLOGY

A D-STATCOM (DISTRIBUTION STATIC COMPENSATOR), WHICH IS GIVEN UNDER, INCLUDES TWO-LEVEL VOLTAGE SOURCE CONVERTER (VSC), A DC ENERGY LIMIT GADGET, A COUPLING TRANSFORMER RELATED IN SHUNT TO THE DISPERSING AFFILIATION. THE LC CHANNEL IS ANTICIPATED THE DISENGAGING OF RESULT DEVELOPS THROUGH STRUCTURE. SINGLE INDUCTANCE AND SINGLE CAPACITANCE HAVE BEING UTILIZED WHILE AN CHANNEL: LAC BE AC SIDE INDUCTANCE AND CAC BE IDENTICAL CAPACITANCE. THE PROPOSED STRUCTURE CONTAINS A DC VOLTAGE SOURCE, INTERLEAVED ASSIST CONVERTER, STREAMED H LENGTH FIVE LEVEL INVERTERS, THREE-STAGE WITH LOADING. INACTIVE CHANNELS ARE ADDRESSED AS KEY FOR GETTING HIGH-CAPACITY RESPONSE FROM THE RESISTOR, AND FRAMEWORK ENORMOUS, WEIGHT AND COST ARE ESSENTIALLY INFLUENCE. THIS PROCEDURE GIVES A MORE UNASSUMING, ADJUSTED AND DISTINCT PART ABOUT THIS SEMICONDUCTORS, AS LONG AS POWER ELECTRONIC ALTERNATOR EVALUATION WORK STANDARD COMPUTATIONAL SEASON ABOUT CPUS.

A. BLOCK DIAGRAM

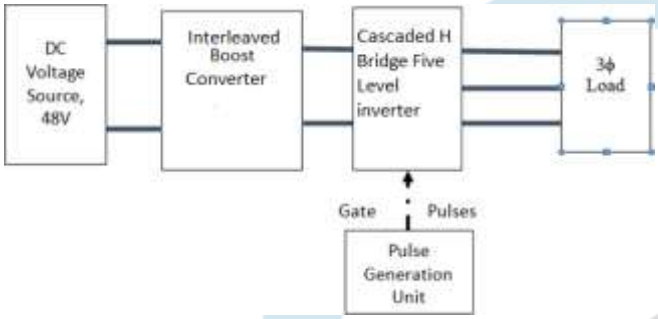

FIG(a) – BLOCK DIAGRAM ON PROPOSED SYSTEM

B. **THE SETUP OF LIFT CONVERTER CIRCUIT IS GIVEN IN FIG AS FOLLOWS**:

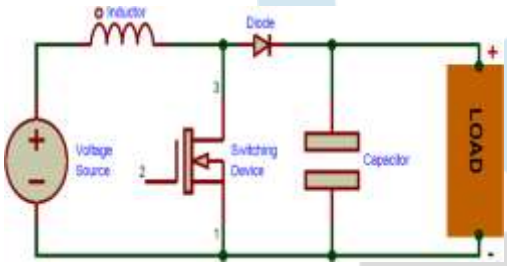

FIG(b) - BOOST CONVERTER CIRCUIT

The lift rectifier gives this store voltage higher other else because of this source voltage utilize this beat width about this doorway signals obliged this switch about lift rectifier. It involves a switch, inductance, capacitance and diode. This utilitarian strategies for this lift rectifier have being given under:

- **MODE 1:**

This mode 1equivalent circuit of lift converter is given in Fig. Here, switch S is turned ON along with this inductance starts to gets charged during this time frame. This inductance and heaviness voltages have being given under:

$$V_L = V_{in}$$
$$V_{Co} = V_o$$

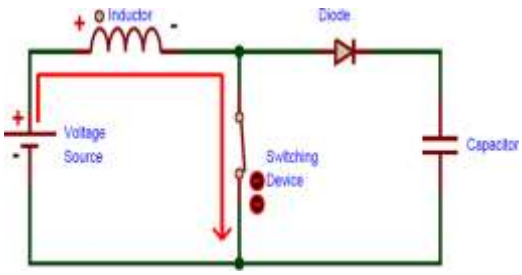

FIG –MODE 1, VL=VIN

- **MODE 2:**

This mode 1equivalent circuit about lift rectifier is given in Fig. Here, switch S is switched OFF along with this inductance begin conveying during this timeframe. Also, related in series with battery voltage to get to helped voltage at load with siding. This heap voltage is given within the going accompanied condition:

$$V_o = V_L + V_{in}$$

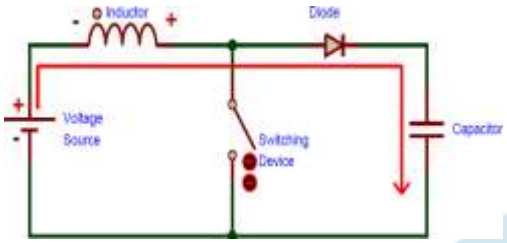

FIG – MODE 2 V0=VIN+VL

C. DESIGN PROCEDURE OF THE PARAMETERS OF THE BOOST CONVERTER:

VIN=12V, V0=48V, P0=500W, FS=10KHZ.

$$D = \frac{Vo}{Vo - Vin}$$

The circuit boundaries of the lift converter are planned utilizing the conditions gave underneath: The obligation proportion about this entryway communication gave into this
lift rectifers switch be given even as:

D = 0.75

$$L = \frac{Vin * D}{\Delta Io * Fsw}$$

This accompanying condition gives the inductor of the lift converter:

L=110µH

L_1=L_2=L/2.

L_1=L_2=55µH

$$\Delta I_L = 0.2 * \frac{Vo}{V_{in}} * I_o$$

The inductor swell current is resolved utilizing the accompanying condition:

ΔI_L=8.33A.

The result capacitance of the lift converter is given beneath:

$$Co = \frac{\Delta Ioc}{8 * Fsw * \Delta Vo}$$

Co=1.63mF.

The result capacitor swell voltage is determined utilizing following connection:

Vc=0.96V

$$\Delta Voc = 2\% \ of \ Vo$$

III. SINGLE PHASE VOLTAGE SOURCE INVERTER.

SINGLE STAGE ALTERNATOR ARE MAJOR ALTERNATORS SO THAT MANUFACTURE PRODUCE A SQUARE SHAPE AC YIELD ALONG A DC INPUT. THESE ALTERNATORS HAVE FUNDAMENTAL ON-OFF CONTROL REASONING, ALONG WITH CLEARLY THEY WORK AT MUCH LOWER FREQUENCIES. DUE TO FURTHEST REACHES OF LOW POWER, THEY ARE FOR THE MOST PART UTILIZED WITHIN POWER SUPPLIES AND ONE STAGE UPS. THEY CAN BE ISOLATED WITHIN TWO ORDERS.

1. HALF PLATFORM SINGLE PHASE VOLTAGE SOURCE ALTERNATOR.

2. FULL PLATFORM SINGLE PHASE VOLTAGE SOURCE ALTERNATOR.

➢ FULL BRIDGE VOLTAGE SOURCE INVERTER:

State	Switching state	Output voltage		
		V_{AO}	V_{BO}	V_{AB}
1	Q_1 and Q_4 are ON	$\frac{V_{dc}}{2}$	$-\frac{V_{dc}}{2}$	V_{dc}
2	Q_2 and Q_3 are ON	$-\frac{V_{dc}}{2}$	$\frac{V_{dc}}{2}$	$-V_{dc}$
3	Q_1 and Q_3 are ON	$\frac{V_{dc}}{2}$	$\frac{V_{dc}}{2}$	0
4	Q_2 and Q_4 are ON	$-\frac{V_{dc}}{2}$	$-\frac{V_{dc}}{2}$	0

TABLE 3.1 – SWITCHING STATES

The indistinct condition should be avoided to be for the most part prepared for portraying the AC yield voltage. It will in general be seen such the AC yield voltage can obtain values up to the DC interface regard VDC whatever be twice particularly gained accompanied by half framework voltage source alternator geologies. Yield voltage be demonstrated while VAB taken through this stack. In a full expansion alternator, here have being four portrayed (conditions 1, 2, 3, and 4) trading conditions as shown in above table. This obscure condition should be by and large fit for describing the AC yield voltage. It might be avoided saw that the AC yield voltage can get characteristics up to the DC associate regard VDC which is twice that got with half framework voltage source alternator topographies. Yield voltage be implied while VAB beginning with this store.

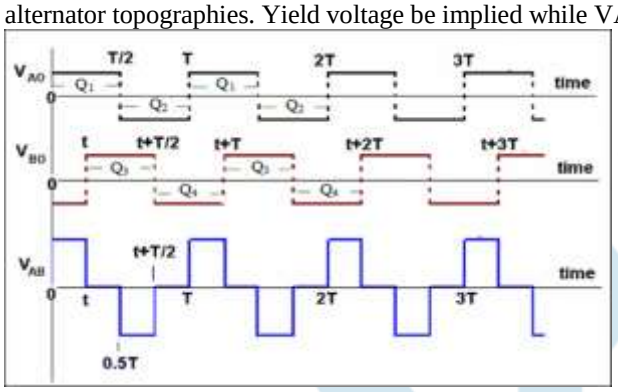

FIG 3.2 – THE OUTPUT VOLTAGE WAVEFORM.

IV. THREE PHASE VOLTAGE SOURCE INVERTER

THE ALL AROUND COMMON THREE-STAGE VSI TOPOGRAPHY IS SHOWN UNDER AND FOCUS CHARACTERISTICS OF THE ALTERNATOR LEGS ARE RELATED WITH THREE-PHASE RL LOAD. HERE HAVE BEING ARE THE EIGHT SIGNIFICANT SWITCH STATES WHICH ARE GIVEN IN SWITCHING TABLE. THE SWITCHES OF ANY LEG OF THE INVERTER (S1 AND S4, S3 AND S6 OR S5 AND S2) CAN'T BE TURNED ON SIMULTANEOUSLY. SINCE IT WOULD ACHIEVE HINDER THIS DC INTERFACE VOLTAGE SUPPLY. ADDITIONALLY, THIS SWITCHES ABOUT ANY LEG ABOUT THIS RECTIFIER CAN'T BE CHANGED OFF MEANWHILE THROUGH KEEP AWAY ILL-DEFINED STATES IN THE VSI AND IN THIS MANNER INDISTINCT AC YIELD LINE VOLTAGES.

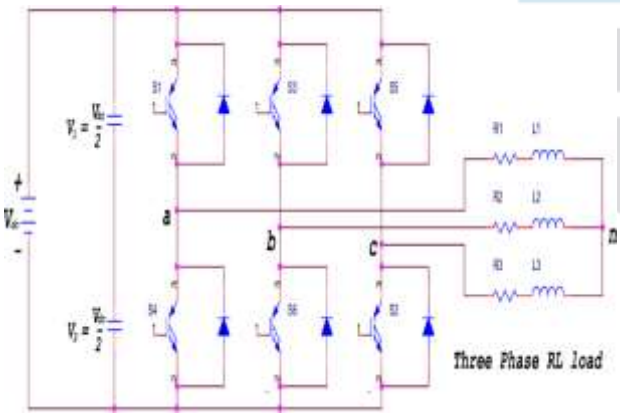

FIG 4.1 – THREE PHASE VOLTAGE SOURCE INVERTER.

Two of eight significant states (7 and 8) have being called as zero change conditions to make zero AC line voltages. For this present circumstance, this AC line streams freewheel through either this upper or lower parts. This abundance conditions (1 to 6 in Switching Table) are called as non-zero change states to make non-zero AC yield voltages. Examination about three-phase VSI be finished in either 1200 mode or 1800 technique for conduction. Here 1800 technique for conduction is presented, and each switch turned on at every600. Conduction of switches within each trading states, post voltages assessed at 'a' and 'b' and weight voltage (Vab) are noted in the going with Table:

TABLE 4.2 – SWITCHING STATES

State	Switching state	Output voltage		
		V_a	V_b	V_{ab}
1	S_1 , S_2 and S_6 are ON	$-V_{dc}$	0	V_{dc}
2	S_2 , S_3 and S_1 are ON	$-V_{dc}$	V_{dc}	0
3	S_3 , S_4 and S_2 are ON	0	V_{dc}	$-V_{dc}$
4	S_4 , S_5 and S_3 are ON	V_{dc}	0	$-V_{dc}$
5	S_5 , S_6 and S_4 are ON	V_{dc}	$-V_{dc}$	0
6	S_6 , S_1 and S_5 are ON	0	$-V_{dc}$	V_{dc}
7	S_1 , S_3 and S_5 are ON	0	0	0
8	S_4 , S_6 and S_2 are ON	0	0	0

➢ The result voltage waveforms of the three stage inverter is given underneath:

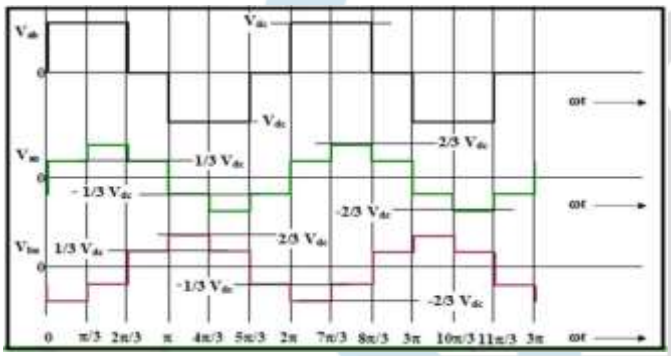

FIG 4.3– THE OUTPUT VOLTAGE WAVEFORM

➢ FIVE-LEVEL CASCADED H-BRIDGE INVERTER:

Staggered alternator (MLI) has shaped toward wide and extraordinary course like action of advancement. Bit by bit, there are a hundred thousand of inverters available from one side of the planet to the other yet staggered inverters go with unprecedented benefit along with and limits. One of them is Cascaded H Bridge inverter (CHB). Completely, the advantages of CHB staggered inverter are focusing on the strengthening of result signal quality and rout the high bet damage to power device hurt for being forgotten to aaccomplish needed voltage and current rating. Staggered inverter are made in strategy for vanquishing a couple of obstacles of the conventional inverter for specific extraordinary components which is incredible including ready to deliver yield voltage and draw current with most decreased bending and can work at low trading repeat. This advance a lone stage 5-level CHB MLI in this paper is shown underneath:

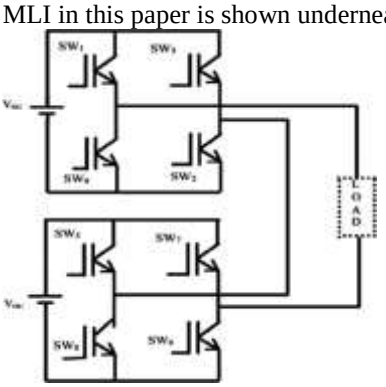

FIG 4.4 – FIVE LEVEL CHB

The single stage 5-level CHB MLI has created five stage of result as augmentation of it input voltage source (Vdc, for example, 2Vdc, Vdc, 0, - Vdc and - 2Vdc. The subsequent AC yield voltage swing coming from +2Vdc to - 2Vdc through zero level. Activity of MLI is resolved in light of the state of the switch-shut along switch-open condition of every semiconductor gadgets. Setup of the

exchanging state will decide yield worth of the inverter. Here five - level CHB-MLI there are five prospects setup of the exchanging condition. The result voltage about every arrangement could be made sense of in such a way:

❖ **STATE – 1**

Here activity the switch-1, switch-2, switch-5, switch-6, are shut, henceforth the result voltage is 2 season of Vdc

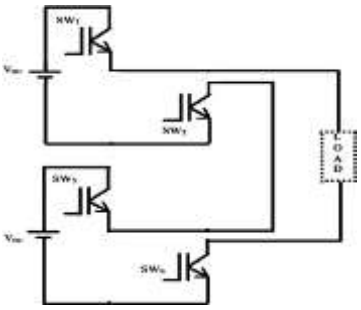

FIG – STATE 1 OPERATION

❖ **STATE – 2**

Here activity the switch-1, switch-2, switch-6, switch-8, are shut, thus the result voltage is Vdc.

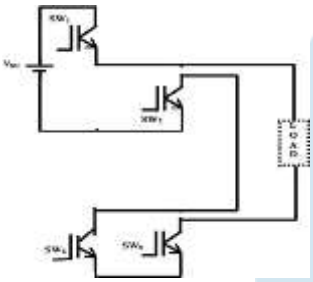

FIG – STATE 2 OPERATION

❖ **STATE – 3**

Here activity the switch-2 switch-4, switch-6 switch-8 are shut, subsequently the result voltage is 0 volt.

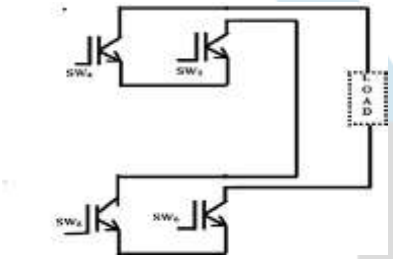

FIG – STATE 3 OPERATION

❖ **STATE – 4**

Here activity when switch-3 switch-4, switch-6 switch-8, are shut, henceforth the result voltage is-Vdc (negative extremity)

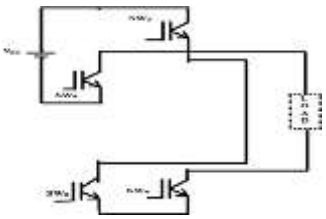

FIG – STATE 4 OPERATION

❖ **STATE – 5**

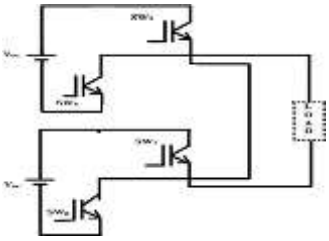

FIG – STATE 5 OPERATION

V. SIMULATION WITH OUTPUT

- **PI CONTROLLER**

PI controllers have being constantly used within industry, especially when speed of the response isn't an issue. A control without D mode is used when:

a) fast response of the structure isn't required.

b) large disrupting impacts and noise are accessible during movement of the association

c) there is only a solitary energy amassing in process (capacitive or inductive).

d) there are colossal vehicle delays in the structure.

P-I controller is essentially utilize to take out this predictable condition botch coming about in view of P controller. Regardless, to the extent that the speed of the response and for the most part steadfastness of the structure, it has an unfavorable outcome. This controller is for the most part utilized within locales where speed about this system isn't an issue. Since P-I controller has no ability to anticipate what's in store goofs of the system it can't decrease the climb time and crash the movements. Whenever applied, any proportion of I guarantee set point overshoot.

- **MANUAL TUNING METHOD**

Manual tuning is achieved by coordinating this limits as demonstrated by the system reaction.

•Until this ideal structure reaction be gotten Ki , Kp and have being changed by seeing system lead.

•Model (for no structure faltering): First lower this auxiliary along with essential worth to 0 and raise this overall worth 100.

•Then increase the irreplaceable worth to 100 including bit by bit cut down the essential worth and notice the structure's reaction.

•Since the structure would be stayed aware of around set point, change set point along with check expecting system redresses within an OK proportion about time.

•If not sufficient alternatively as long as an expedient reaction, proceed with to cut down this indispensable worth.

- **PROPORTIONAL CONTROLLER**

With corresponding band, the regulator yield is relative to the mistake or an adjustment of estimation.

Regulator yield = E(t)*100/(Proportional addition)

With a corresponding regulator offset (deviation from set-point) is available. Expanding the regulator gain will make the circle go temperamental. Essential activity was remembered for regulators to wipe out this offset.

- **INTEGRAL CONTROLLER**

With fundamental activity, the regulator yield is corresponding to how much time the mistake is available. Vital activity wipes out offset. Regulator yield = (1/Integral Time)*(Integral of E(t)) Fundamental activity takes out the offset. The reaction is fairly oscillatory and can be balanced out some by adding subsidiary activity. Essential activity gives the regulator an enormous increase at low frequencies that outcomes in wiping out offset and "beating aggravations".The PI regulator yield U in s-area is given by the accompanying condition:

U(s) = K (1+ 1/Tis)E(s) .

VI. **The simulation circuit for the proposed single phase 5 level CHBMLI isprovided below:**

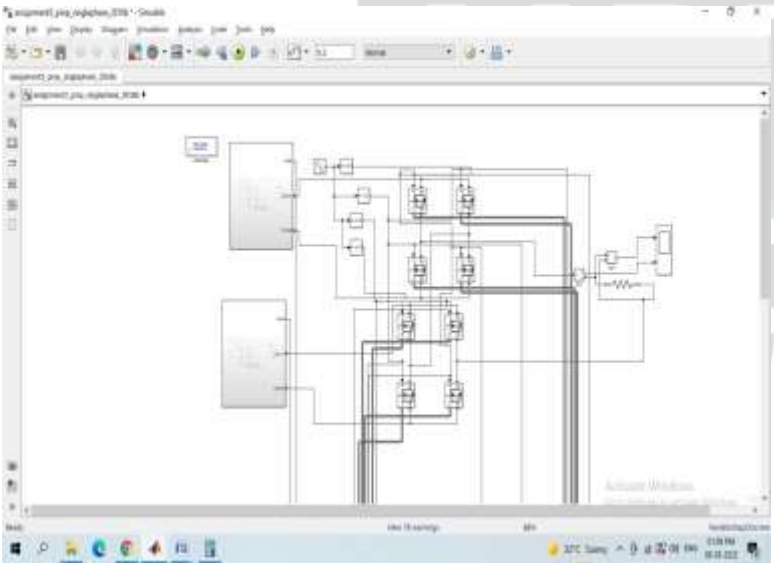

In this, the battery of 12V is given as DC voltage source and it is supported to 24V by the interleaved help converter and gave to the H-Bridges and the result voltage of flowed H-Bridge inverter is 48V. The misfortunes are determined at each stage and the amount of the misfortunes are given toward the end.

- **The output voltage and current of the interleaved boost converter isprovided below:**

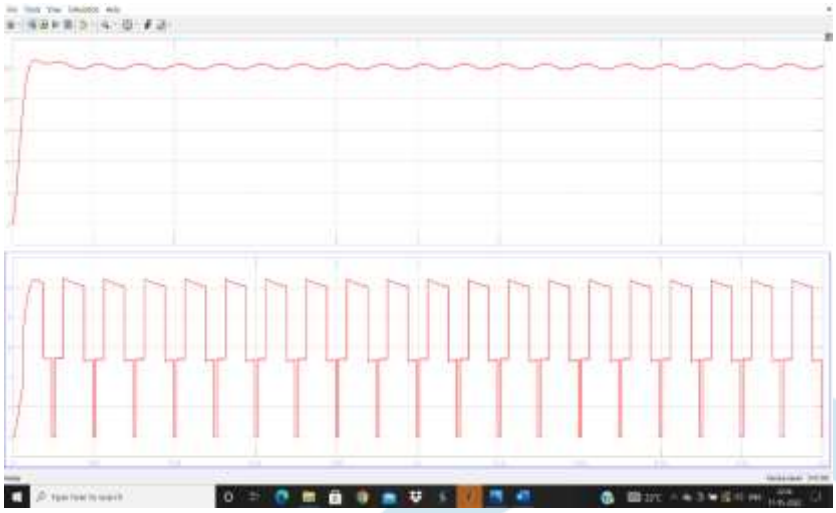

FIG – 6.2 In this, yield voltage is around 25V and current is around 11A.

➢ **The boost converter switch losses are provided below:**

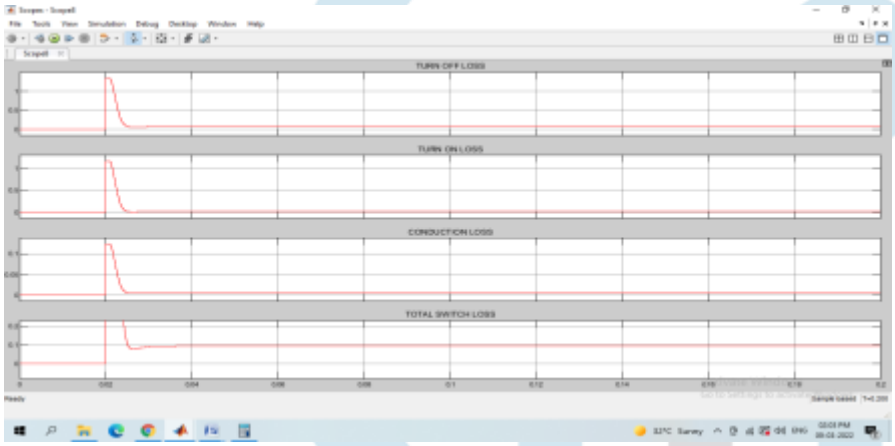

FIG – 6.3 In this, the lift converter complete switch misfortune is 0.1

➢ **The inverter voltage and current is provided below**:

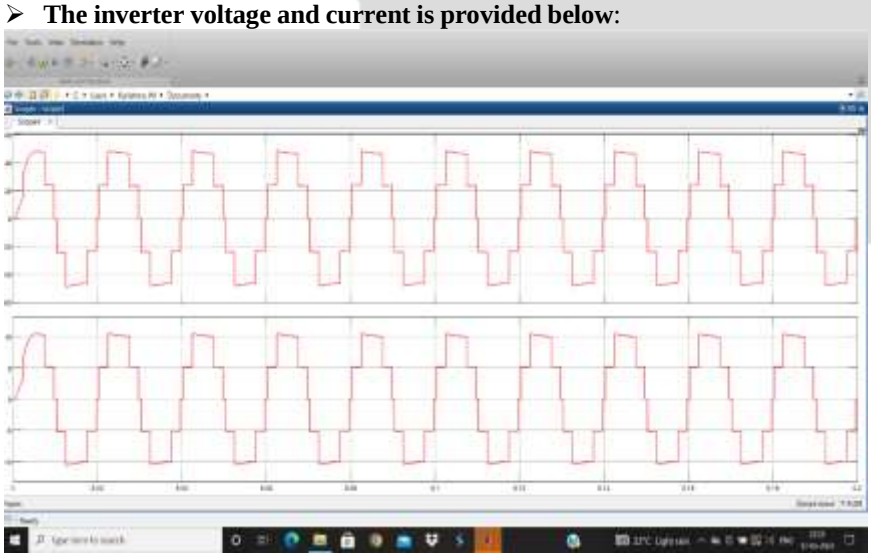

The single stage 5-level CHB has produced five stage of result as augmentation of it input voltage source (Vdc, for example, 2Vdc, Vdc, 0, - Vdc and - 2Vdc.

➢ **The H-Bridge switch losses are provided below:**

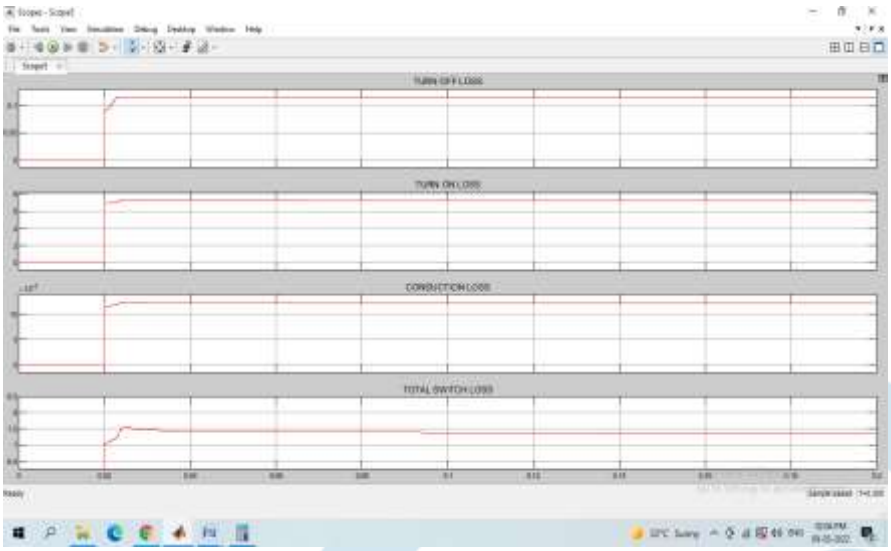

FIG – 6.5 The complete switch misfortune for inverter is around 7.5W.

➢ **The overall switching losses including inductor core loss are providedbelow:**

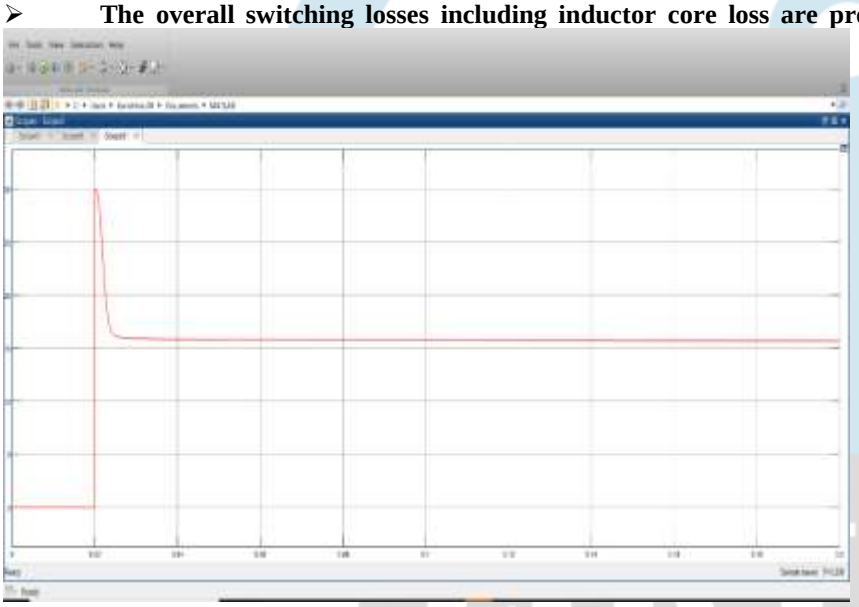

FIG 6.6 The complete misfortunes are around 15.75W.

VII. CONCLUSION

The intension about aforementioned paper be to plan an influence adversity along electrical warm entertainment strategy, for the exact impact incidents along warm evaluation of a three-stage (Sic) alternator taking into account the manufacture's data sheet subtleties. The work was finished including isolates channel plan, and direct and non-straight showing of an alternator as long as a automatic automobile use. An summarized straight pattern have being developed accompanied by statistical influence adversity calculation, and that could be changed along with frame work according to this system conclusions. Here summarized direct model of the inverter is useful for separated strength along with controllability analysis and control system plan. changing generation about this three-stage alternator was executed for the appraisal about power disasters, for instance instruction and trading setbacks, within MATLAB Simulink® including inquiry table techniques in an innovative way. This warm model about this alternator have being delivered about this appraisal of device junction temperature. Inside seeing an battery supply along with weight, the remarkable adequacy about the alternator with the assortment of temperature could in like manner is checked through this simulation model. This versatile definition based large unweave ringness multiplication design instrument is especially significant as long as this pre-establishment along with post-assessment about an power electronic system. This instrument can be applied for improvement about system efficiency by changing this device limits like Si, Sic and GaN materials, uninvolved channels limits, working trading repeat and control plan. Through this arranged amusement model, it's attainable to make an alternator with large adequacy, large power thickness, diminished expense and huge.

REFERENCES

[1]. S. Chakraborty, H.-N. Vu, M. M. Hasan, D.-D. Tran, M. El Baghdadi, and O. Hegazy, "DC-DC converter topologies for electric vehicles, plug-in hybrid electric vehicles and fast charging stations: state of the art and future trends," Energies, vol. 12, no. 8, p. 1569, 2019.

[2]. J. Reimers, L. Dorn-Gomba, C. Mak, and A. Emadi, "Automotive traction inverters: Current status and future trends," IEEE Trans. Veh. Technol., vol. 68, no. 4, pp. 3337–3350, 2019.

[3]. Z. Zhou, M. S. Kanniche, S. G. Butcup, and P. Igic, "High-speed electro-thermal simulation model of inverter power modules for hybrid vehicles," IET Electr. Power Appl., vol.5, no. 8, pp. 636– 643, 2011.

[4]. B. N. Torsæter, "Evaluation of Switching Characteristics, Switching Losses and Snubber Design for a Full SiC Half-Bridge Power Module." NTNU, 2016.

[5]. B. Agrawal, M. Preindl, B. Bilgin, and A. Emadi, "Estimating switching losses for SiC MOSFETs with non-flat miller plateau region," in 2017 IEEE Applied Power Electronics Conference and Exposition (APEC), 2017, pp. 2664–2670.

[6] H. Rasool, A. Rasool, A. A. Ikram, U. Rasool, M. Jamil, and H. Rasool, "Compatibility ofobjective functions with simplex algorithm for controller tuning of HVDC system," Ing. e Investig., vol. 39, no. 3, 2019.