Design and Development OfCPAP (Continuous Positive Airway Pressure) Using Internet of Things

M.S. Jeyalakshmi[1], G S Nanditha[2], KeerthanaR[3], Nandhini R[4], RagulSk[5]

[1] Asst. Prof, [2,3,4,5] UG scholars, Department of Biomedical Engineering,
Jerusalem College Of Engineering, Narayanapuram, Chennai-600100.

Abstract—

***Continuous Positive Airway Pressure (CPAP)* is a mode of non-invasive mechanical ventilation commonly used in neonatology. However, one of the difficulties faced is the high cost of this device and its numerous add-on functions, such as Apnea Hypopnea Index (AHI), flow limitation, among others. Thus, in this study, we aim to address the design and construction of a CPAP device as proof of concept to be used in a as Portable Device. In order to design the experimental CPAP device with sensory instrumentation for providing data to a micro-controlled system, and signal conditioning boards of sensors have been fitted to achieve optimized CPAP function with low energy consumption. The Data received would be stored to the Cloud Platform.**

***Keywords* — Continuous Positive Airway Pressure (CPAP), RespiratoryDistress Syndrome (RDS), Transpiration medical device, Internet of Things.**

INTRODUCTION

Colin Sullivan, an Australian physician and professor, invented CPAP in 1980 at Royal Prince Alfred Hospital in Sydney. Continuous positive airway pressure (CPAP) could be a style of positive airway pressure (PAP) ventilation within which a continuing level of pressure larger than gas pressure is unceasingly applied to the higher tract of someone. The application of positive pressure may be intended to prevent upper airway collapse, as occurs in obstructive sleep apnea, or to reduce the work of breathing in conditions such as acute decompensated heart failure. CPAP medical care is very effective for managing clogging apnea. Compliance and acceptance of use of CPAP therapy can be a limiting factor, with 8% of people stopping use after the first night and 50% within the first year. A CPAP machine is simply one sort of PAP (positive airway pressure) device. whereas CPAP is that the commonest among these machines, there square measure alternative varieties also.

These include:
•Bi-level PAP. This machine uses 2 totally different pressures — one throughout inhalation and one throughout exhalation.
•Auto CPAP. This device self-regulates, employing a vary of pressures to stay airways open.
•Adaptive servo-ventilation (ASV). Reserved for individuals with central sleep disorder, ASV keeps your airway open by delivering a compulsory breath once necessary.

HARDWARES

A. ARDUINO UNO

Arduino is a single-board microcontroller to make using electronics in multidisciplinary projects more accessible. The hardware consists of a simple opensource hardware board designed around an 8-bit Atmel AVR microcontroller, or a 32-bit Atmel ARM. The software consists of a standard programming language compiler and a boot loader that executes on the microcontroller.

Fig 1: Arduino uno

B.NODE MCU

The Node Mcu(ESP8266) is an open-source firmware and development kit that helps you to Prototype your IOT product within a few Lua script lines.It has special features like Open-source, Interactive, Programmable, Low cost, Simple, Smart, WI-FI enabled.

Fig 2: Node MCU

C. SOUND DETECTION SENSOR:

The sound sensor module provides an easy way to detect sound and is generally used for detecting sound intensity. This module can be used for security, switch, and monitoring applications. Its accuracy can be easily adjusted for the convenience of usage. It uses a microphone which supplies the input to an amplifier, peak detector and buffer. When the sensor detects a sound, it processes an output signal voltage which is sent to a microcontroller then performs necessary processing.

Fig 3: Sound detection sensor

D. MAX30100:

The MAX30100 is an integrated pulse oximetry and heartrate monitor sensor solution. It combines two LEDs, a photodetector, optimized optics, and low-noise analog signal processing to detect pulse oximetry and heart-rate signals.
The MAX30100 operates from 1.8V and 3.3V power supplies and can be powered down through software with negligible standby current, permitting the power supply to remain connected at all times.

Fig 4: Max30100

E. AIR BLOWING CONTROLLED MOTOR:

A fan usually consists of a single rotor with or without a stator. It causes only a small pressure rise as low as a few centimeters of water column. Generally it rises the pressure up to a maximum of 0.07 bar (70 cm WG). In the analysis of the fan, the fluid will be treated as incompressible as the density change is very small due to small pressure rise. Blower may consists of one or more stages of compression with its rotors mounted on a common shaft. The air is compressed in a series of successive stages and is passed through a diffuser located near the exit to recover the pressure energy from the large kinetic energy. The overall pressure rise may be in the range of 1.5 to 2.5 bars. Blowers are used in ventilation, power station, workshops etc. Compressor is used to produce large pressure rise ranging from 2.5 to 10 bar or more.A single stage compressor can generally produce a pressure rise up to 4 bar. Since the velocities of air flow are quite high, the Mach number and compressibility effects may have to be taken into account in evaluating the stage performance of a compressor.

F.LIQUID CRYSTAL DISPLAY:

Liquid crystal displays (LCDs) have materials which combine the properties of both liquids and crystals. Rather than having a melting point, they have a temperature range within which the molecules are almost as mobile as they would be in a liquid, but are grouped together in an ordered form similar to a crystal.An LCD consists of two glass panels, with the liquid crystal material sand witched in between them. The inner surface of the glass plates are coated with transparent electrodes which define the character, symbols or patterns to be displayed polymeric layers are present in between the electrodes and the liquid crystal, which

makes the liquid crystal molecules to maintain a defined orientation angle.One each polarizers are pasted outside the two glass panels. These polarizers would rotate the light rays passing through them to a definite angle, in a particular direction.

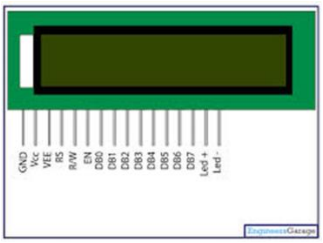

Fig 5: LCD display

G.RELAY SWITCH CIRCUIT:

Relays are electromechanical devices that use an electromagnet to operate a pair of movable contacts from an open position to a closed position.The advantage of relays is that it takes a relatively small amount of power to operate the relay coil, but the relay itself can be used to control motors, heaters, lamps or AC circuits which themselves can draw a lot more electrical power.

Fig 6: Relay Switch Circuit

III. SOFTWARES

ARDUINO IDE:
The Arduino Integrated Development Environment or Arduino Software (IDE) contains a text editor for writing code, a message area, a text console, a toolbar with buttons for common functions and a series of menus. It connects to the Arduino hardware to upload programs and communicate with them.
Programs written using Arduino Software (IDE) are called sketches. These sketches are written in the text editor and are saved with the file extension .ino. The editor has features for cutting/pasting and for searching/replacing text. The message area gives feedback while saving and exporting and also displays errors. The console displays text output by the Arduino Software (IDE), including complete error messages and other information. The bottom righthand corner of the window displays the configured board and serial port. The toolbar buttons allow you to verify and upload programs, create, open, and save sketches, and open the serial monitor.

Fig 7: Arduino IDE

B. THINGSPEAK CLOUD PLATFORM:

ThingSpeak is an open-source software written in Ruby which allows users to communicate with internet enabled devices. It facilitates data access, retrieval and logging of data by providing an API to both the devices and social network websites.ThingSpeak is an IoT analytics platform service that allows you to aggregate, visualize, and analyze live data streams in the cloud. You can send data to ThingSpeak from your devices, create instant visualization of live data, and send alerts.

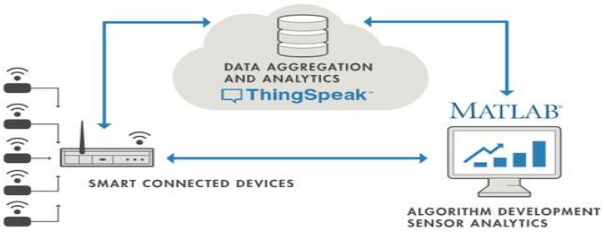

Fig 8: ThingSpeak Cloud Platform

PROJECT DESIGN

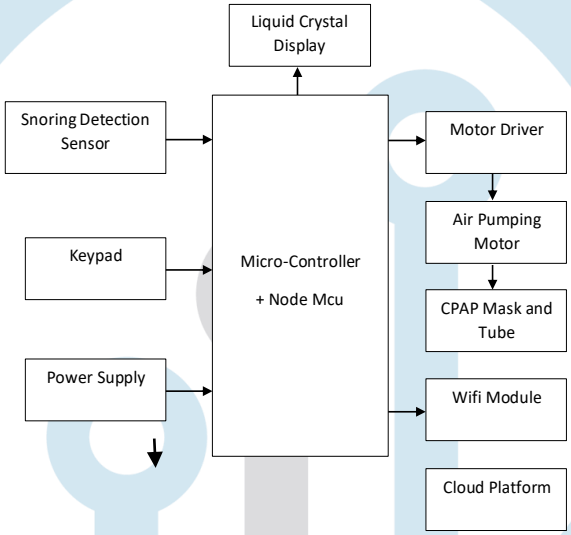

Fig 9: Block Diagram

Arduino is connected to MAX30100 which detects the heartrate and SpO2. LCD, motor, snoring detection sensor, relay is connected to Node MCU which offers the Cloud platform -ThingSpeak The power supply given is 230v. But the operating voltage is 5V. From motor the 230v is converted to 12V and then 5V via amplifier and capacitor respectively.

HARDWARE WORKING:

The snoring sensor is attached to the nasal mask of the patients. When the patient starts snoring the snoring sound is detected. There are two modes Manual & Automatic mode.

•MANUAL MODE- Manual mode switch is switched ON This mode is operated by the care taker or the patient. Once turned on the air flow motor compressor starts rotating and sends the atmospheric air through the mask into the nasal path. The air flow motor compressor consists of filters which filters the atmospheric air before directing to the mask. On LCD heart are,SpO2, S-Snoring and Timer[countdown(10sec)] is displayed. To OFF the compressor the Manual mode switch is again pressed.

•AUTOMATIC MODE- Automatic mode switch is switched ON. Once turned on the air flow motor compressor starts rotating and sends the atmospheric air through the mask into the nasal path. The air flow motor compressor consists of filters which filters the atmospheric air before directing to the mask. On LCD heart are,SpO2, S-Snoring and Timer is displayed. To OFF the compressor there is no need to press the Automatic mode switch. Automatically after 10 second the compressor stops. This eliminates suffaction of the patient.The process is not done with just a one snore. There is a limitof at leastabove 5count of sneeze.

SOFTWARE WORKING:

Code for the process is written on Arduino software and compiled.

MATLAB -Developing and Deploying Analytics for IoT Systems [CLOUD PLATFORM] Things speakThe patients data should be confidential so there is a need to protect them. There are two mode hospital mode and usermode

•Hospital Mode: Webpage admin access:To import / export the data of the patient admin should fill the fllowing specifications: Mail I'D, password, IP pin, time zone channel name and API[Application Program Interface] key to connect with the user and design.Admin can access the page with full freedom. They can allow which data should be viewed by the user e.g. graphical format, private / public view. The data can be downloaded as Excel sheet by the admin for hospital use only. The channel can be saved for future verification.

•User Mode: User can view the data as a graphical representation via webpage or app both in iOS and android. They should know the channel name and the API key.

PROJECT RESULTS

Fig 10: Continuous Monitoring Through Lcd Display

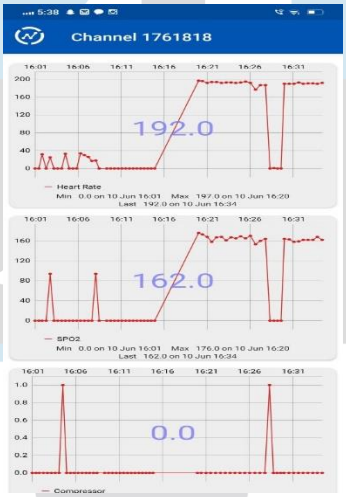

Fig 11: Monitoring And Data Visualization Through Phone Using IoT

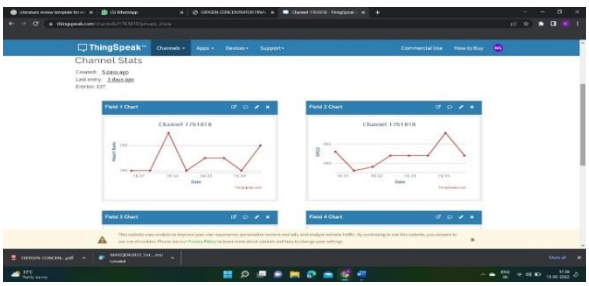

Fig 12: Data Visualization Through Computer Using Cloud Platform

VI. APPLICATIONS

- Could be used for People with unhealthy Snoring.
- Could be used for People with Sleep Apnea Related Problems.
- Could be used for People with Asthma for Passage Clearing at PoC Level.

VII. FUTURE WORK

To improve the result, further development such as improving the designmore precise and compact can be done.

VIII. CONCLUSION

In this paper we proposed the design and development of CPAP using IoT using Arduino, snoring detection sensor, node MCU, MAX30100,air flow motor compressor, LCD and relay circuit. The equipment is small in size, low cost and portable and consumes low power. This design is used for the patients who are having uncontrollable snoring at a long run time. It can be also used for the patients with sleep apnea etc. To reduce snoring,air is given at a limited time (10sec) to the nasal path via mask. Heart rate and SpO2 is detected in addition. The parameters are viewed on LCD, ThingSpeak webpage and App.

IX. REFERENCES

1. Sk. Al Mamun , Md. Mahadi Hassan , Md. Riadul Islam and M. Raihan "Obstructive Sleep Apnea Detection Based on Sound Interval Frequency using Wearable Device" IEEE – 49239, 11th ICCCNT 2020 July 1-3, 2020 - IIT – Kharagpur, India.
2. B Vijayalakshmi, S Anusha, S Padmapriya, C Ramkumar, S Prasanth Bharadhwaaj R Priyanka "An Early Alert System For Sleep Apnea Disorder Using IoT" 020 5th International Conference on Devices, Circuits and Systems (ICDCS) 978-1-7281-6368-0/20/31.00 2020 IEEE 10.1109/ICDCS48716.2020.243559.
3. Gihan Jayatilaka, HarshanaWeligampola, Suren Sritharan, PankayrajPathmanathan, Roshan Ragel, IsuruNawinne "Non-contact Infant Sleep Apnea Detection" 2019 IEEE 14th International Conference on Industrial and Information Systems (ICIIS), 18-20 Dec., Peradeniya, Sri Lanka.
4. VionaricaGusti, Wan Jun Wu, Arpan Grover, Sabian Chiu, Kai-Wen Su, Erica Ma, Chanelle K. Chow, Ella Sit, Jun Lim, Abhijit Pandhari, Mattias Park, Ryan Lee, Faisal Shahril, Shawn T. Lim, Christopher Y. Nguan, Dan Driedger, Avinash K. Sinha, Ivan G. Scrooby, Neilson J. Mclean, Michael W. Lee, Tyler D. Yan "The COSMIC Bubble Helmet: A Non-Invasive Positive Pressure Ventilation System for COVID-19" 10.1109/OJEMB.2020.3036742 ISSN: 2644-1276.
5. Surrel, Grgorie and Aminifar, Amir and Recon, Francisco and Murali, "Online Obstructive Sleep Apnea Detection on Medical Wearable Sensors", IEEE transactions on biomedical circuit and systems, vol. 12 no. 4 pp. 762-773, 2018.
6. Trung Q. Le, Changqing Cheng, AkkarapolSangasoongsong, WoranatWongdhamma, And Satish T. S. Bukkapatnam "Wireless Wearable Multisensory Suite and Real-Time Prediction of Obstructive Sleep Apnea Episodes" 2168-2372 2013 IEEE.
7. Salvatore Andrea Pullano, Ifana Mahbub, Maria Giovanna Bianco, Samira Shamsir, Syed Kamrul Islam, Mark S. Gaylord, Vichien Lorch, Antonino.