INDUCTION MOTOR DIRECT TORQUE CONTROL WITH SYNCHRONOUS PWM

Ms. Vaishnavi N. Shingnapurkar
Student, G.H.Raisoni University, Amravati

Prof. C.M.Bobade
Professor, G.H.Raisoni University, Amravati

Abstract:
The use of torque and flux to regulate a motor is known as direct torque control (DTC). However, the typical DTC experiences ripples in the torque and current. Low number of voltage vectors applied to the motor when it is being controlled by the traditional DTC technique is the cause of undesirable torque and current ripples. The DTC of the PMSM has been examined in this article.The simulation of the DTC is carried out while stator flux and voltage space vectors are being examined. In this research, a novel DTC technology based on flux error vector (FEV-DTC) is proposed to reduce torque and flux ripples. This technology is based on the analysis of basic DTC of permanent magnet synchronous motor (PMSM).Results from simulation and experiments using the traditional DTC and the FEV-DTC are presented and contrasted. The torque and flux ripples are reduced in the new DTC, according to the results.

Keywords: synchronous PWM; induction motor drive; direct torque control

1. INTRODUCTION

Because of their benefits, such as their high power density, high torque, and lack of maintenance requirements, permanent magnet synchronous motors (PMSM) are frequently employed in high-performance drives used in industrial robots and machine tools. The use of high-coercive PM materials has significantly improved the magnetic and thermal properties of the PM in recent years For induction machines, the Direct Torque Control (DTC) approach was initially put forth. Synchronous drives can also benefit from this idea. The DTC method differs from traditional vector control, which uses current control loops to regulate torque in the rotor reference frame. However, the standard DTC technique always causes significant electromagnetic torque and flux linkage waves, resulting in subpar steady state performance and variable switching frequency in the inverter.Since the first industrial device was manufactured in 1996[2–5], numerous researchers have focused on enhancing the steady state performance of the fundamental DTC. The benefits of induction motors and the DTC approach for permanent magnet synchronous motors were both proposed in the late 1990s[8]. However, there are fresh issues with the use of zero vectors.This is particularly true at low speeds, when applying zero voltage vectors to the PMSM maintains torque rather than reducing it.

The removal of zero vectors enhances dynamics but also increasing torque and flux ripples in steady state, which makes it more difficult to regulate the motor smoothly at low speeds. Therefore, the primary research topic in a DTC of PMSM is how to minimise torque ripples. A method to lessen the turbulence in the electromagnetic torque and flux linkage is space vector modulation DTC.Better DC bus usage, smaller torque ripples, lower total harmonic distortion in the current flowing through an AC motor, decreased switching loss, and ease of integration into digital systems are just a few benefits of space vector modulation techniques. This study introduces the FEV-DTC principle and suggests a technique to calculate the flux error. The voltage vectors in the FEV-DTC system are calculated using the difference between the flux vectors of the current and reference stator, and they are implemented using the space vector modulation technique.

According to the simulation results, the suggested DTC system retains a similar level of torque response while exhibiting reduced flux linkage and torque ripples. The power circuit's complexity does not rise at the same time. As a result of increasing air pollution and dropping fossil fuel prices over the past 10 years, electric vehicles (EVs) have advanced quickly. Manfred Deerbrook patented DTC in the US and in Germany, with the latter invention being filed on October 20, 1984. Both patents were referred to as "direct self-control" (DSC).

However, in an IEEJ paper published in, Isao Takahashi and Toshihiko Noguchi devised a comparable control method known as DTC.September 1984 as well as a late 1986 IEEE article. Thus, all three people are typically given credit for the DTC idea.The shape of the path along which the flux vector is regulated is the only difference between DTC and DSC; the former path is quasi-circular, whilst the latter is hexagonal, resulting in a higher switching frequency for DTC than for DSC. DSC is typically utilised for higher power drives, whereas DTC is targeted towards low-to-mid power drives. (The rest of the article simply uses the word DTC for the sake of simplicity.)Since its inception in the middle of the 1980s, DTC applications have benefited from its ease of use and incredibly quick torque and flux control responses for high performance induction motor (IM) drive applications. Baader's 1989 thesis, which offers an excellent overview of the topic, also looked at DTC.

2. PROPOSEDMETHOD

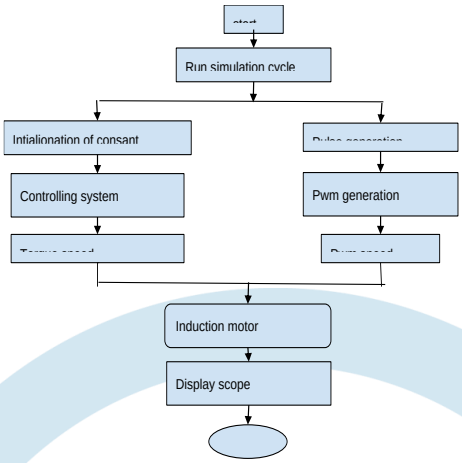

Fig.FlowChart

Wind Energy

An induction motor similar to an induction motor is being used in this project. We are providing 230v, 50HZ, dc supply for the entirety of our project. Using a rectifier, we are transforming this 230v. A rectifier, also referred to as a bridge rectifier, is used to transform an AC power supply into DC power. After that, when converting an AC power source to a DC power supply with the aid of a rectifier, we obtain two points that look like +ve& -ve. There will be some repulses then. We use a capacitor of 39*10-4 uF here to counteract the repelling force The IGB7 circuit is then used to convert the DC power source to the AC power source. As a result, we are able to measure the voltage at "A" and "B." We are marking it as "Vab" after measuring. The machine pins receive a "vAB" +ve pulse. Similar to how a chime receives its first and second phases, "m" and "A" begin with an ac supply to the GND. We now want to regulate the torque, or TN. The system will operate at a constant speed if a constant value or ram function is chosen. The system will operate at linear speed if we use the reference speed/linear value. Now, by dropping into the speed block, we are giving them the system we are creating as I/P becauseThe auto tuning function in PID is essential for owning a system because it stops working for any other value once we set a certain one. It explains why the PID controller is so crucial to my project. The PID controller is responsible for producing this pulse. The IGBT inverter receives the pulse on the GATE pin. Additionally, the gate pin receives a pulse that causes it to turn on and off quickly. This causes us to generate sine waves that will eventually become PWM pulses. This PWM will be shown in graphical form on the O/ P.This displays the wave in a graphical representation. The first one is the auxiliary winding current waveform, which displays the system's winding current. The second one displays rotor speed. Electromagnetic torque, which displays torque as waves, comes in third. The current system is given power on the fourth.

3. PROJECT IMPLEMENTATION

MATLAB Simulation Model

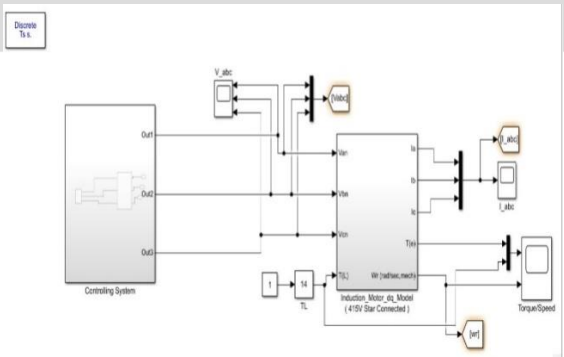

Fig.MATLAB Simulink model of proposed methodology

The MATLAB simulation model for synchronous pwm direct torque control of an induction motor is depicted in the above image. Controlling System, a component of the induction motor, is included in the model above.

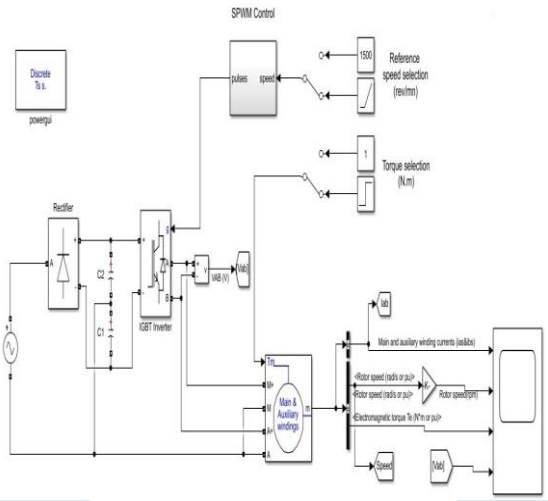

Fig.MATLAB Simulink model of Induction motor of subsystem

4. RESULT

SIMULINK RESULTS

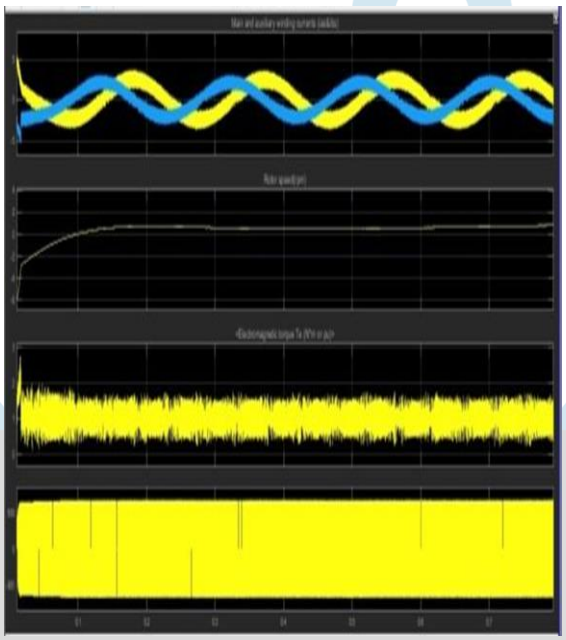

Fig: - Voltage, Current, Active Power, Reactive Power and Apparent Power of PV Farm

The waveform of the main and auxiliary current, rotor speed, and electromagnetic torque is depicted in the above image.

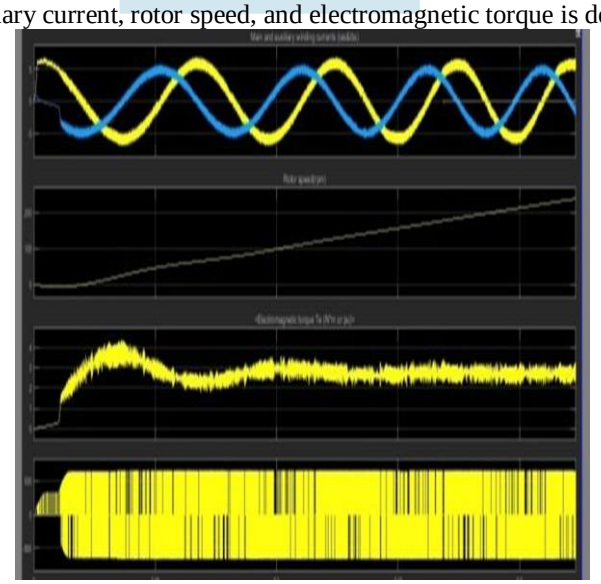

Fig: - Voltage, Current, Active Power, Reactive Power and Apparent Power of Load

The waveform of the primary and secondary components, rotor speed, and electromagnetic torque are shown in the above figure.

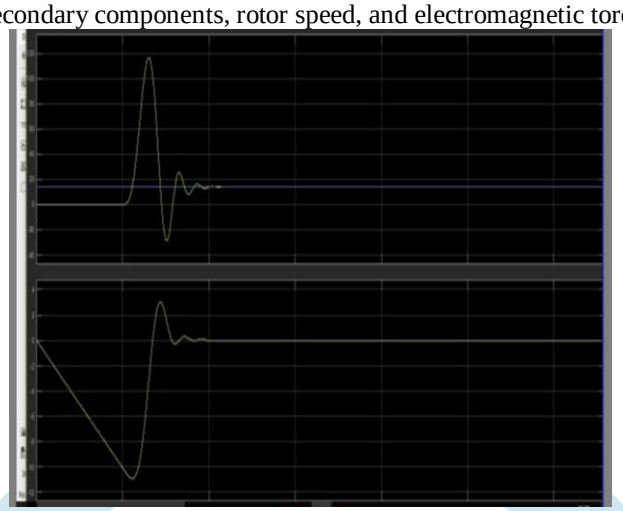

Fig: - Characteristic of rotor speed

The waveform of the characteristic of rotor speed is depicted in the above figure.

5. CONCLUSION

Through a literature review and survey about the speed control of induction motors, this project presents the works of various authors who have addressed a variety of issues with their methodologies, including speed variations, current and voltage ripple, or harmonics when using scalar control techniques. This project compares several speed control methods and explains the numerous issues with IM control brought on by complex circuitry. It also discusses the methodology that was suggested.

6. FUTURE SCOPE

Because the chosen voltage space vector is used for the whole switching period, regardless of the severity of the torque error, the standard DTC technique produces substantial torque ripple. By adjusting the duty ratio of the chosen voltage vector during each switching period based on the size of the torque error and position of the stator flux, it is possible to reduce this torque ripple and improve drive performance. The foundation of the SVPWM approach is this. Therefore, future work will involve simulating the DTC scheme using the SVPWM approach and comparing it to the DTC-SVM scheme.

7. REFERENCES

1. B.N. Singh,Bhim Singh and B.P. Singh, “Performance analysis of closed loop field oriented cage induction motor drive”, Journal of Electric Power Systems and Research, December 2018.
2. Bor-Ren Lin “High Power Factor AC/DC/AC Converter with Random PWM”, IEEE Transactions on Aerospace and Electronic System, July 2021
3. Jae-Ho Choi, Hyong-Cheol Kim and Joo-Sik Kwak “Indirect current control scheme in PWM voltage-sourced converter,” Proceedings in. Power Conversion Conference – Nagaoka August 2019
4. Ivensky G., Zeltser I., Kats, A., Ben-Yaakov, S., “Reducing IGBT losses in ZCS series resonant converters,” IEEE Transactions on Industrial Electronics, 2021.
5. J.S.Lai, B.K.Bose, “An induction motor drive using an improved high frequency resonant DC link inverter,” IEEE Transactions on Power Electronics, 2020.
6. P.N. Enjeti, S.A. Choudhury, “A new control strategy to improve the performance of a PWM AC to DC converter under unbalanced operating conditions,” IEEE Transactions on Power Electronics, 2020.
7. J. Rodríguez, L. Morán, J. Pontt, J. Hernández, L. Silva, C. Silva, and P. Lezana, “High-voltage multilevel converter with regeneration capability,” IEEE Transactions on Industrial Electronics, August 2019.
8. R.Ghosh and G.Narayanan, “Control of Three-Phase, Four-Wire PWM Rectifier,” IEEE Transactions on Power Electronics,January 2020.
9. H. Fujita and H. Akagi, “The unified power quality conditioner: the integration of series- and shunt-active filters,” IEEE Transactions on Power Electronics, March 2020.