TORQUE RIPPLE REDUCTION IN SRM USING AN ADAPTIVE FUZZY PI CONTROL IN MODEL PREDICTIVE DTC

Awin Oommen John

Electrical and Electronics Dept.
Sree Buddha college of engineering
Alappuzha, India

Athira B

Electrical and Electronics Dept.
Sree Buddha college of engineering
Alappuzha, India

Abstract— ***Switched Reluctance Motor(SRM) is widely used for numerous industrial applications due to its simple structure, minimum cost and maximum efficiency. Due to double saliency structure of SRM, torque ripple is high, which causes vibration and noise. In this paper, an improved model predictive direct torque control (MPDTC) based on an adaptive fuzzy logic controller and PI is introduced to reduce torque ripples in SRM. The direct torque control using MPC is proposed to maintain the motor torque and motor speed to tracking desired signals with a satisfactory response Combination of Model Predictive control and FLC will give better speed response and reduction in torque ripples. The simulation tests were performed using a non-linear model of 8/6 - 75 kW SRM that is fed with the asymmetrical converter. The effectiveness of the proposed method is tested via simulations performed by MATLAB/Simulink software. The obtained outcomes show the effectiveness of the suggested approach compared to conventional direct torque control techniques.***

Keywords— Switched Reluctance motor, Torque ripple reduction, PI control, Fuzzy Logic Control, Acoustic noise, MPDTC, predictive dtc,SRM,Ripple reduction

INTRODUCTION

A switched reluctance motor (SRM) is a doubly salient synchronous motor without a permanent magnet or winding on the rotor and with concentric windings on the stator poles. As a result, the rotor does not have any copper loss. Cores for the rotor and stator are laminated. The motor is inexpensive to build, has a simple structure, and is robust. The advantages of SRM include its high power density, high reliability, good controllability, and high efficiency. Despite the benefits of SRM that have already been mentioned, there are still some drawbacks that prevent its widespread use. Due to its non-linearity, they include difficult control, torque ripple, vibration, and acoustic noise. Numerous methods have so far been suggested for the motor's torque ripple reduction Since SRM operate in highly saturated environments, their nature is very nonlinear. Magnetic saliency between the stator and rotor poles causes the highly non-uniform reluctance torque [2]. Phase currents, rotor positions, and instantaneous phase torque are nonlinear functions of phase flux linkages. As a result, the SRM drives' inherent torque ripples, vibrations, and acoustic noise can become serious issues if not properly controlled. In high performance servo applications that demand smooth operation with minimal torque pulsations, the reduction of torque ripples is crucial. To reduce the torque pulsations, there are essentially two main strategies: one involves improving the motor's magnetic design, and the other involves sophisticated electronic control. In the electronic approach, the operating parameters, such as supply voltage, turn on and turn off angles, current level, and shaft load, are combined optimally [4]. For the reduction of torque ripples in SRM, a straightforward current modulation technique is one of these. Both classical and intelligent controllers can be used to implement the straightforward and well-liked current compensating techniques. The traditional controllers are extremely sensitive to changes in parameter and demand an exact mathematical model of the systems. Due to the strong nonlinear characteristics of SRM, intelligent controllers based on artificial intelligence techniques, such as fuzzy logic controllers, can be used to obtain dynamic control of SRM drive.

CHARACTERISTICS OF SRM

An electric machine called the SRM transforms reluctance torque into mechanical power [6]. The salient-pole structure of the stator and rotor in the SRM helps to produce a high output torque. The tendency of the poles to align produces the torque. The rotor will move to a position that minimises reluctance and maximises the excited winding's inductance. Although the SRM has a doubly salient structure, the rotor lacks windings and permanent magnets. Essentially, the rotor is a piece of steel (and laminations) that has been bent into salient pole shapes. Because of this, it is the only motor type that has salient poles in both the rotor and stator [7].The SRM promises a dependable and affordable variable-speed drive due to its inherent simplicity and will undoubtedly displace many drives currently using cage induction, PM, and DC machines in the near future. In order to prevent the rotor from being in a situation where it is unable to produce initial torque, which happens when all of the rotor poles are aligned with the stator poles, the number of poles on the stator of the SRM is typically unequal to the number of the rotor.A Four phase asymmetric converter for SRM is shown in Fig. 1. Each of the four phases in this four-phase SRM, which has eight stator poles and six rotor poles overall, is made up of two coils wound on opposing poles and connected either in series or parallel to other phases to create a number of electrically separate circuits or phases. Depending

on the converter or control scheme, these phase windings may be excited individually or collectively.The situation where the stator and rotor poles of the phase are exactly lined up with one another, attaining the minimum reluctance position, and at this position phase inductance is maximum is referred to as the aligned position of a phase. As the rotor poles move in either direction away from the aligned position, the phase inductance gradually decreases. The unaligned position is where a phase's rotor poles are symmetrically out of alignment with its stator poles, and it is also where the phase's inductance is at its lowest.The situation where the stator and rotor poles of the phase are exactly lined up with one another, attaining the minimum reluctance position, and at this position phase inductance is maximum is referred to as the aligned position of a phase. As the rotor poles move in either direction away from the aligned position, the phase inductance gradually decreases. The unaligned position is where a phase's rotor poles are symmetrically out of alignment with its stator poles, and it is also where the phase's inductance is at its lowest.

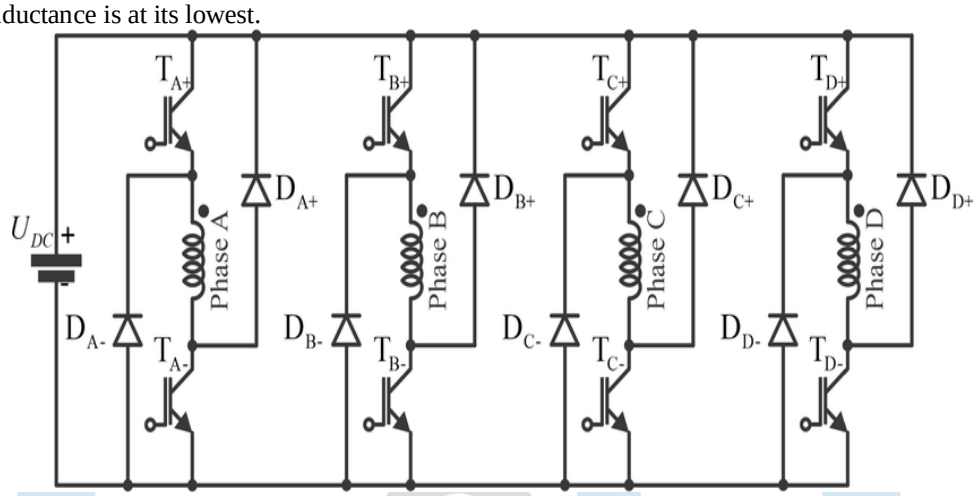

Fig 1. Asymmetric converter for four phase SRM

Fig. 2 depicts the 8/6 SRM's construction. The reluctance motor has nonlinear control characteristics as a result of its reliance on magnetic saturation for torque generation, as well as the effects of fringing fields and the conventional fundamental square wave excitation [8]. In comparison to other machines, the torque ripple is higher due to the double saliency construction and the discrete nature of the torque produced by the independent phases. The SRM produces more acoustic noise than other machines due to its doubly salient structure. The radial magnetic force induced is the primary cause of acoustic noise. The most significant drawbacks of the SRM are therefore increased torque ripple and acoustic noise. The absence of permanent magnets imposes the burden of excitation on the stator windings and converter, which increases the converter kVA requirement. Compared with PM brushless machines, the per unit stator copper losses will be higher, reducing the efficiency and torque per ampere.

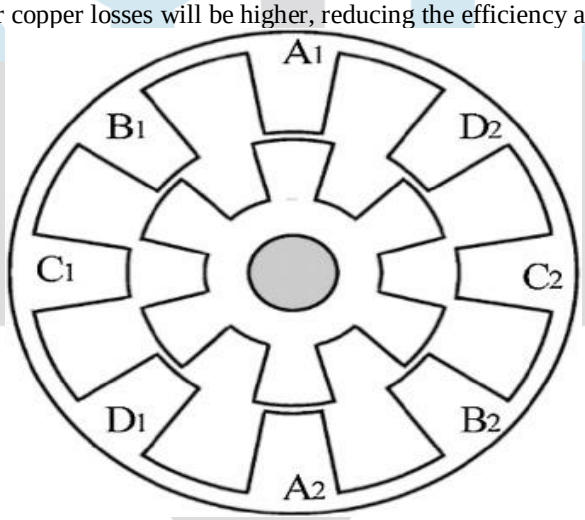

Fig 2. The SRM 8/6 Construction

The stator and rotor of a switched reluctance motor have salient poles, with concentrated stator windings and no windings on the rotor. As a result, it is mechanically sturdy and perfectly suited for operating at high speeds. The SRM uses tiny air gaps to produce high torque levels at low peak currents. Unlike motors like DC motors and Induction motors, the rotor losses are less than the stator losses. Through the positive increasing region of the phase inductance region, which is carried out through a converter, the phase winding of the SRM is excited. The most widely used converter is the asymmetrical converter because it has the ability to switch between soft and hard switching, independent excitation of all phases, and fault tolerance.

MODELLING OF SRM

The physical behaviour of the switched reluctance motor can be described by a set of dynamic equations which is shown in Table 1 that incorporate the rotor inertia (J), rotating friction, and the load torque (Tload). The rotating friction is represented by

Bm, the viscous coefficient of friction (with units of N-m/rad/s), and depends on the rotor's angular velocity (ωrotor). Sum of these forces provide the dynamic model for the SRM.

Model Equations for a Switched Reluctance Motor is shown in Table 1.

TORQUE RIPPLE MINIMIZATION FOR SRM DRIVE

When the machine co-energy is variable, the torque ripple appears, leading to a variety in the stator flux linkage, excitation current, and rotor position. The flux leakage inductance and torque become extremely coupled and become nonlinear as a result of the adjustment in rotor position and phase current. The torque ripples will now be reduced by controlling the current and making the right turn on and turn off angle choices. Because it depends on the rotor position and the reference current, which depend on the motor's speed and the estimated load torque? Here, a different combination approach is suggested to obtain speed control with a decrease in SRM torque ripple.

Description	Equation
Fundamental Phase frequency of current	$f_1 = \frac{rpm}{60} N_r$ (1)
Mechanical frequency	$f_{mech} = m f_1$ (2)
Instantaneous Phase torque	$T_{\emptyset k} = \frac{d}{d\theta} \int_0^{i_k} \lambda(\theta, i) di$ (3)
Average motor torque	$T_{avg} = \frac{1}{T_{rev}} \int_0^{T_{rev}} T_{net} dt$ (4)
Rotor Position relative to phase	$\theta_k = N_r \theta - \frac{2\pi(k-1)}{m}$ (5)

Table 1 Model Equations for SRM

.

The proposed control method includes turn-on and turn-off switching angles along with speed and current control. Ideal decisions are made regarding the proportional and integral gains of the speed and current controllers as well as the turn on and turn off angles. These optimal combinations of the gain parameters can reduce torque ripple and subsequently improve the SRM drive's performance.

$$T_{ripple} = \frac{T_{max} - T_{min}}{T_{avg}} \quad (1)$$

Where, the maximum, minimum and mean values of the total torque is meant as T_{max}, T_{min} and T_{avg}.

DESIGN OF SRM CONTROLLERS

The speed controller transforms the speed error into the torque reference value (or current reference value). We restrict the output of the speed controller in order to maintain the torque values and current within predetermined bounds. The most popular speed controller for drivers has two independent control loops—an inner and an outer one. Controlling current is the responsibility of the inner loop. The outer control loop generates the current or torque reference, and the proportional–integral PI controller is activated by the difference between the reference and actual speed.The torque ripple is created when the former phase is excited against voltage and the latter phase has already been excited due to the saliency of the stator and rotor. To reduce the torque ripple, the point of intersection between the two excited phases must be advanced to a higher value. A compensating current signal must be added in order to lessen the torque ripple. The reference current, which in turn depends on the motor speed and the torque load value, and the rotor position both affect this signal. The reference current signal, which in theory should be constant in steady state but produces significant ripple, is added to the output compensating current signal produced by the controllers. The compensating signal should then be changed to produce a torque output that is free of ripples. It turns out that this signal must be created using a function with a high level of mathematical complexity. In this study, an intelligent controller called a fuzzy logic controller (FLC) is employed to provide compensating current and lessen torque ripples in SRM drives.

E/EC	**NB**	**NS**	**ZE**	**PS**	**PB**
NB	NB	NB	NB	NS	ZE
NS	NB	NB	NS	ZE	PS
ZE	NB	NS	ZE	PS	PB
PS	NS	ZE	PB	PB	PB
PB	ZE	PS	PB	PB	PB

Table 2 . Fuzzy Logic Control Rules

Conventional PI, PID controllers are replaced by Fuzzy logic controller. Nonlinear controllers are designed using Different schemes can be implemented with Fuzzy logic control and it is robust too. Torque ripple in SRM can be reduced by Fuzzy Logic Controller with current compensation algorithm.[15]. TSF concepts were also introduced in FLC [38].Unity torque is maintained at any condition Fuzzification, rule base, and defuzzification are the three phases of a fuzzy logic system. During the fuzzification process, the crisp input is transformed into fuzzy linguistic variables. An expert system has two parts: a knowledge base and an inference mechanism. The knowledge base's internal components include the rule base and database. [15]The knowledgebase contains the expert's knowledge of the current operation. The inference mechanism uses IF-THEN rules to translate the fuzzy input into output with the Mamdani-type controller. [14] By choosing suitable membership functions for input and output, the rules are built. Table 2 shows the fuzzy rule base with five membership functions. The seven membership functions which are used for formingthe rule base are NB= Negative Big ,NS= Negative Small, ZE= Zero, PS= Positive Small, PB= Positive Big.In Fuzzy membership function there are two input variable and each input variable have seven linguist values, so 5x5=25 Fuzzy control rule are in the Fuzzy reasoning: Model Predictive Control (MPC), also known as Moving Horizon Control (MHC) or Receding Horizon Control (RHC), is a popular technique for the control of slow dynamical systems. MPC is one technique for obtaining a feedback controller synthesis from knowledge of open-loop controllers to measure the current processes state and then compute ωrapidly for this open-loop control function. The first portion of this function is then used during a short interval, after which a new value of the function is computed for this measurement.

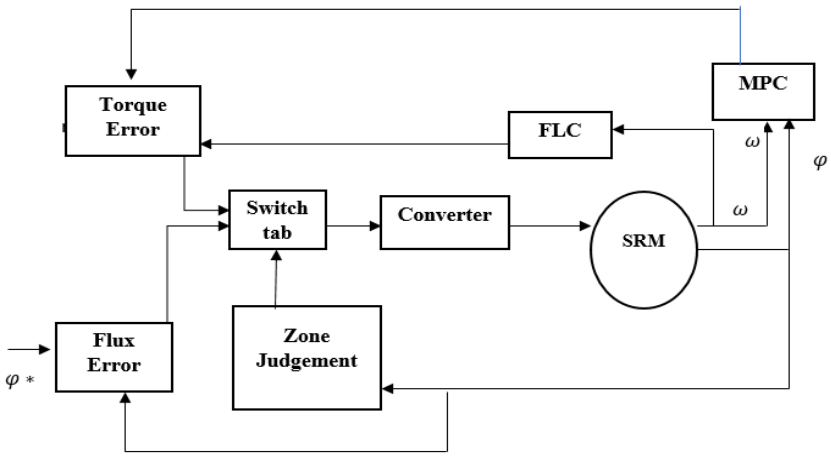

Fig 3 Proposed Fuzzy PI based Model Predictive Torque Control

In conventional DTC technique, the amplitude of the torque hysteresis band is fixed. A Mamdani-type FLC is developed to adapt the torque hysteresis band in order to reduce the ripples in the motor-developed torque. FLC controls the upper and lower limits of the torque hysteresis band on the basis of its feedback inputs. The fuzzy systems are universal function approximators With the help of predictive control techniques, the SRM torque ripples can be reduced compared to tradition current control techniques. MPC provides a good characteristic for motor drives converters among other controllers, these characteristics may include fast response, accuracy, and suitability.

. SIMULATION RESULT

To study the performance of the improved MPDTC based on an adaptive fuzzy and PI , the MATLAB/Simulink model of the proposed composed control strategy is developed and matlab model of the proposed system is shown in fig (6.2). The proposed improved system is composed of an SRM drive, predictive torque controller, adaptive fuzzy logic modulator.For doing simulation we choose an 8/6 SRM of rating 75KW. The specifications of the switched reluctance motor used for simulation are shown in table 6.1 Parameter Value Number of phases 4 Stator and rotor poles 8 and 6 Stator phase resistance 1.3Ohm. Friction 0.02Nms. Aligned inductance 12.875e-3 H Unaligned inductance 1.167e-3 H Saturated aligned inductance 0.625 mH.

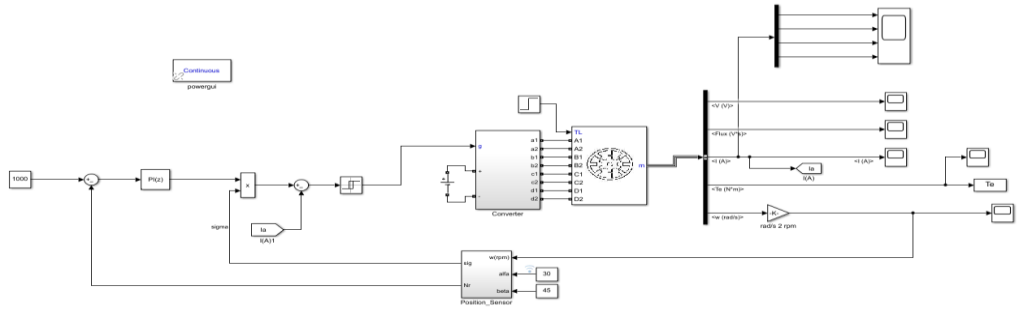

Fig 4. Simulink model of SRM drive with PI control

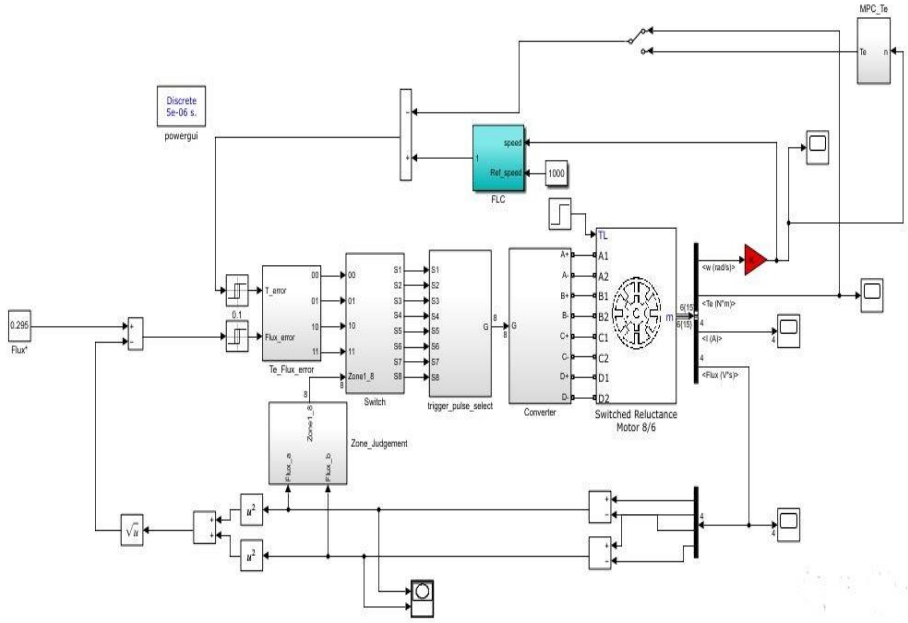

Fig 5 Simulink model of SRM drive with Improved control

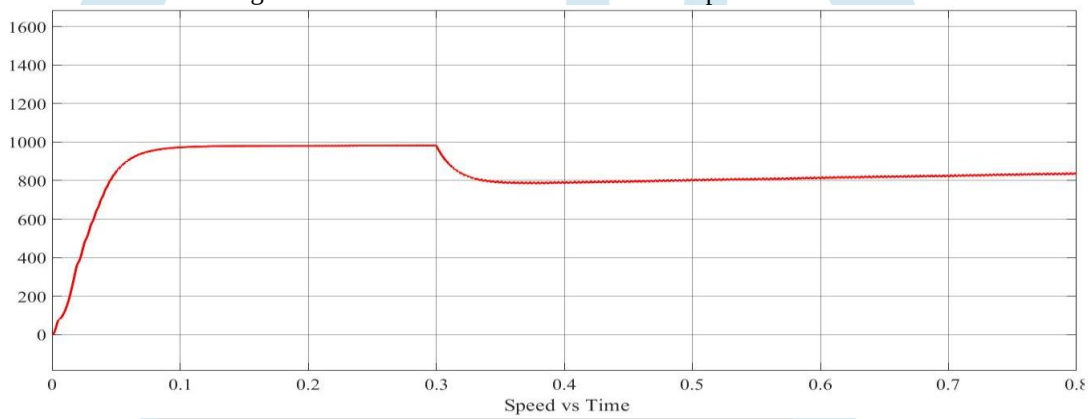

Fig 6 Simulation response of Speed vs Time in SRM using PI controller

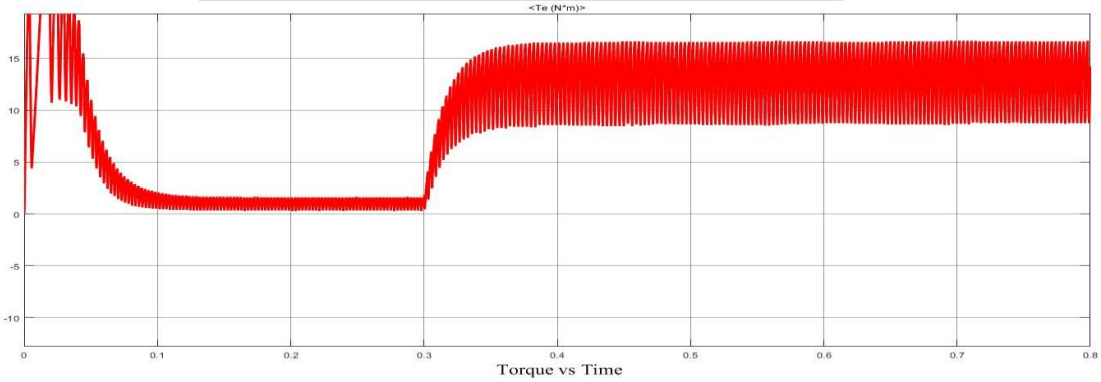

Fig 7 Simulation response of Torque vs Time in SRM using PI controller

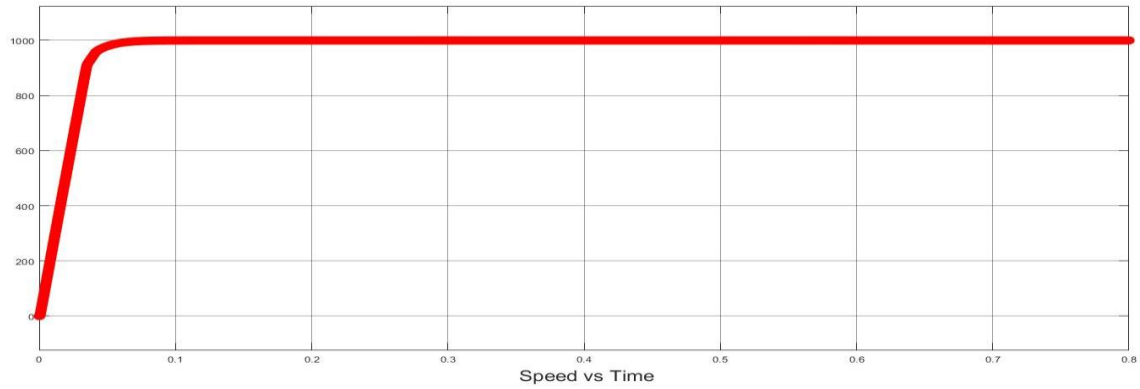

Fig 8 Simulation response of Speed vs Time in SRM using Improved

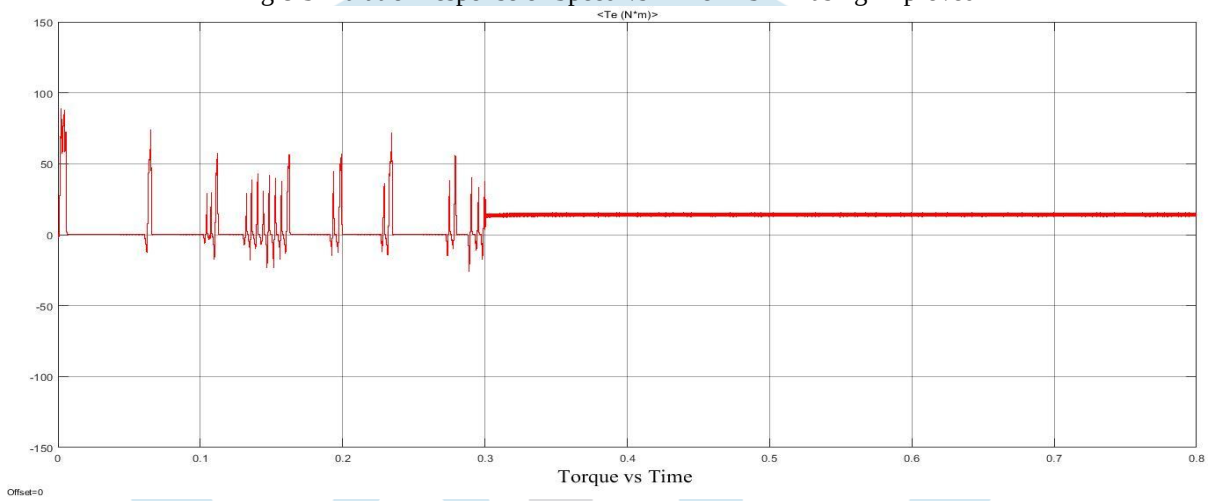

Fig 9 Simulation response of Torque vs Time in SRM using FLC

From simulation response it is identified that when load is applied at 0.3s, Torque response of PI controller in SRM contains large amount of ripples while using improved method, torque ripples is reduced by 18%. Also Speed response of PI control is not up to the limit as the speed fluctuates. But in improved method we get fast speed response and speed fluctuation after applying load torque is also negligible.

CONCLUSION

The most significant obstacle to using SRM in a variety of applications is torque ripples, so in the previous years, research on torque ripples minimization methods was most in demand. In this paper, switched reluctance motor control using a fuzzy PI based MPDTC logic controller and a PI control method were compared. The following are the key findings of this work after testing the system controls with MATLAB/SIMULINK:

- New improved method improves Torque characteristics by reducing torque and flux ripples, resulting in fewer problems for the motor (heating, mechanical vibration etc).
- Robustness and fast response of traditional method is preserved.
- Proposed method improves speed response and reduced torque ripples.

References:

1. Iqbal Husain ”Minimization of Torque Ripple in SRM Drives” IEEE Trans. Power Electron., vol. 49, pp. 83– 88, Feb 2002.
2. T. J. E. Miller, Ed., “Switched Reluctance Motors and their Control”, Lebanon, OH:Magna Physics/Oxford University Press (1993)
3. M. Divandari and M.M. Kabir,” Acoustic Noise Reduction of Switched Reluctance Motor Drives”,
4. M. Nagrial, J. Rizk and W. Aljaism” Dynamic Simulation of Switched Reluctance Motor using Matlab and Fuzzy Logic”
5. Luis Oscar de Araujo Porto Henriques, “Proposition of an Offline Learning Current Modulation for TorqueRipple Reduction in Switched Reluctance Motors: Design and Experimental Evaluation” IEEE Trans ind electronics, vol. 49, no. 3, june 2002.
6. Suying Zhou, Hui Lin” Modeling and Simulation of Switched Reluctance Motor Double Closed Loop Control System”.
7. RameshKumar, Dhivya, Sundar, “PI Controller Based Torque and Speed Control of Five Phase Switched Reluctance Motor”.

8. F. Soares, P.J. Costa Branco, “Simulation of a 6/4 switched reluctance motor based on Matlab/Simulink environment”, IEEE transaction on aerospace and electronic systems, vol. 37 ,no. 3, pp.989-1009, July 2002.
9. MATLAB, Users guide: fuzzy logic toolbox, The Mathworks Inc; 2010.
10. Behnood Rahmani, Hamed Rafezi,” Solving Fuzzy Logic Problems With MATLAB” [12] L.X. Wang, A Course in Fuzzy Systems and Control, Prentice-Hall
11. Z. Lin, et al., "High Performance Current Control for Switched Reluctance Motors Based on On-Line Estimated Parameters," IET Electri. Power Appl., Vol. 4, pp. 67-74, 2010
12. H. H. Qi, T. T. Zhang, Z. G. Li, and Y. J. Wei, “ The Study of The Torque Ripple Minimization of Switched Reluctance Motor,Based On DTC, ” Transactions of Cina Electrotechnical Society, vol. 22, n. 7, pp.136-140, 2007

I. H. Altas and A. M. Sharaf, "A generalized direct approach for designing fuzzy logic controllers in Matlab/Simulink GUI environment," International Journal of Information Technology and Intelligent Computing, vol. 1, pp. 1-27, 2007.