IoT Based Health Monitoring System

[1]Samiksha Sarnaik, [2]Sakshi Kshirsagar, [3]Sadanand Jori

[1]Student of engineering, [2]Student of Engineering, [3]Student of Engineering
[1]Electronics and Telecommunication Engineering,
[1]International Institute of Information Technology, Pune,India

Abstract—Health condition of a patient is majorly defined by the body temperature and well being of heart. To determine the well-being of heart and temperature, they must be continuously monitored. This research paper presents a temperature, SpO2, heart ratemonitoring device. All the measured parameters are displayed on web server and are stored in database. The design of this system depends in Arduino, SQLlite andlocalhost. This device can help the doctors to remotely check the health status of their patients.

***IndexTerms*—Pulse Oximeter, SpO2, Heart rate, health monitoring device, database, WebServer, Arduino, SQLlite.**

INTRODUCTION (HEADING 1)

A Pulse oximeter is a light-based device that is used to measure the arterial oxygen saturation (SpO2) as a percentage of hemoglobin in blood and heart rate. Accordingly, the PPG signal is used to monitor the Heart rate by detecting the differences in the blood volume in the investigated area. The variation of heart rate varies on the state of the patient. The average heart rate of an individual at rest should be between 60 to 100 bpm. One the other hand the SpO2 level depends on the concentration of hemoglobin in red blood cells, its average value for a healthy individual should be between 95°Contactless Infrared Digital Temperature Sensor can be used to measure temperature of a particular object and the surrounding temperature within range - 70°C to 382.2°C. The sensor uses IR rays to measure the temperature of the object without any physical contact and communicates to the microcontroller (i.e. ESP32 in our case) using the I2C protocol.

DEVICE DESIGN

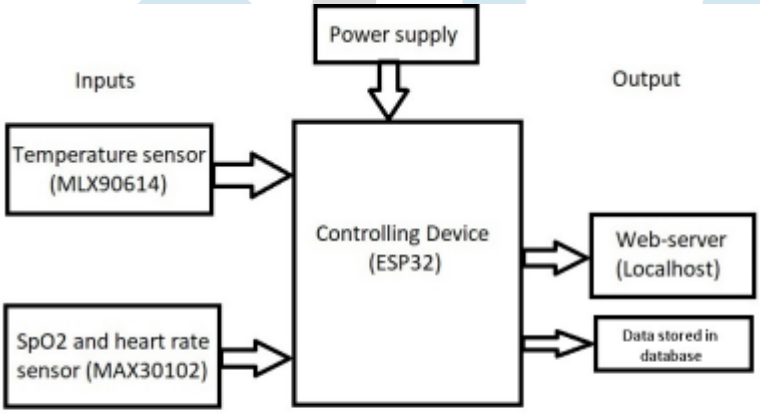

Fig-2.1: Block diagram of IoT Based Health Monitoring System

In above figure, the work flow of system is described. The non-contact temperature sensor MLX90614 will sense the temperature and the oxygen level and heart rate will measure by MAX30102 then these measurements will be given to ESP32 as input then after processing the data, output will be displayed on web-server. The measured data will store in database. It also measures surrounding temperature. The oxygen level and heart rate will be measured by MAX30102. Then these measurements will be given to ESP32 as input then after processing the data, output will be displayed on web-server. The measured data will be stored in database. For storing the data, SQLlitestudio is used.

First of all , GPIO(General purpose input output) pins will be initialized, then SSID(Service Set Identifier) for given Wi-Fi connection will be initialized. After initialization of SSID, sensors (MLX90614, MAX30102) will be initialized. Temperature will be accepted by ESP32 and if temperature is detected then it will show measurements on web-server. Also,the data will be storedin database. If the temperature is not detected then process will back to the accept block. Oxygen level and Heart rate is measured and accepted by ESP32 then if both Oxygen level and Heart rate detected, the data will display on web-server and also store the measured data in database. And if Oxygen level and Heart rate not detected then again, the process will start from accept block. After displaying the data on web-server and storing in database, the process will end.

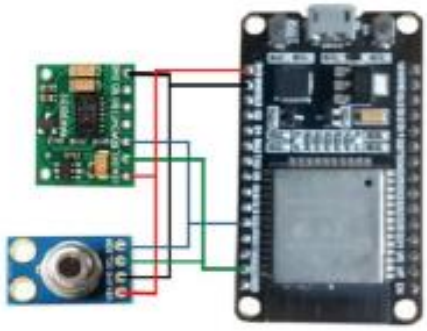

Fig-2.2: Circuit diagram of IoT BasedHealth Monitoring System

Connections: MAX30102 = Vin - 3.3v, GND - GND, SCL - D22, SDA - D21
MLX90614 = Vin - 3.3v, GND -GND, SCL -D22, SDA - D21

Working:

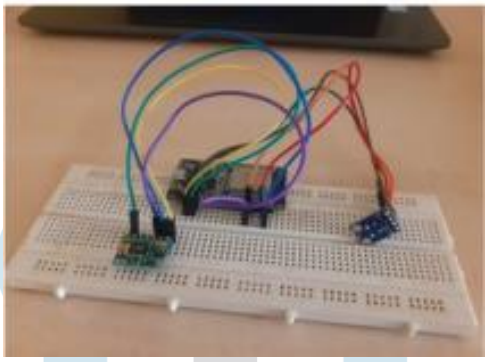

Fig-2.3: Breadboard testing of IoT Based Health Monitoring System

Fig-2.4: PCB design of IoT Based Health Monitoring System

I. Result and Conclusion

MLX90614 will sense the temperature of object and MAX30102 sense the SPO2 level and heart rate of the person. If there is nofinger i.e. there is no finger then it will again accept the input or it will show the message- "No Finger". In Fig- 3.1, Output is displayed on serial monitor. And in Fig-3.2, output of localhost which will see if the device is connected to the given Wi-Fi connection.Fig- 3.3 shows the measured data which is stored in database and the data is store with date and time.

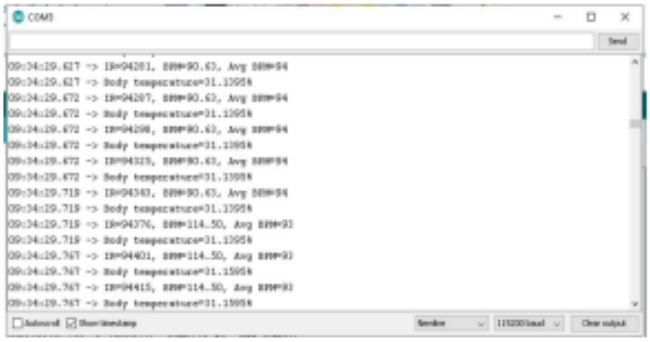

Fig-3.1: Serial Monitor output of IoT Based Health Monitoring System

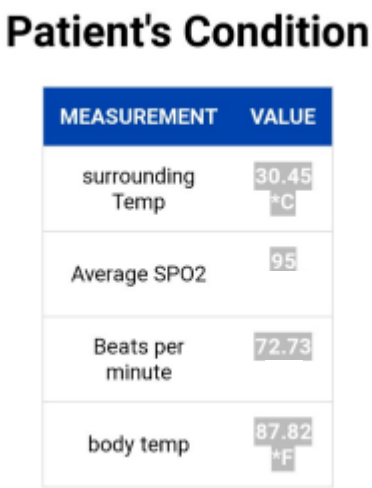

Fig-3.2: Web-server output of IoT Based Health Monitoring System

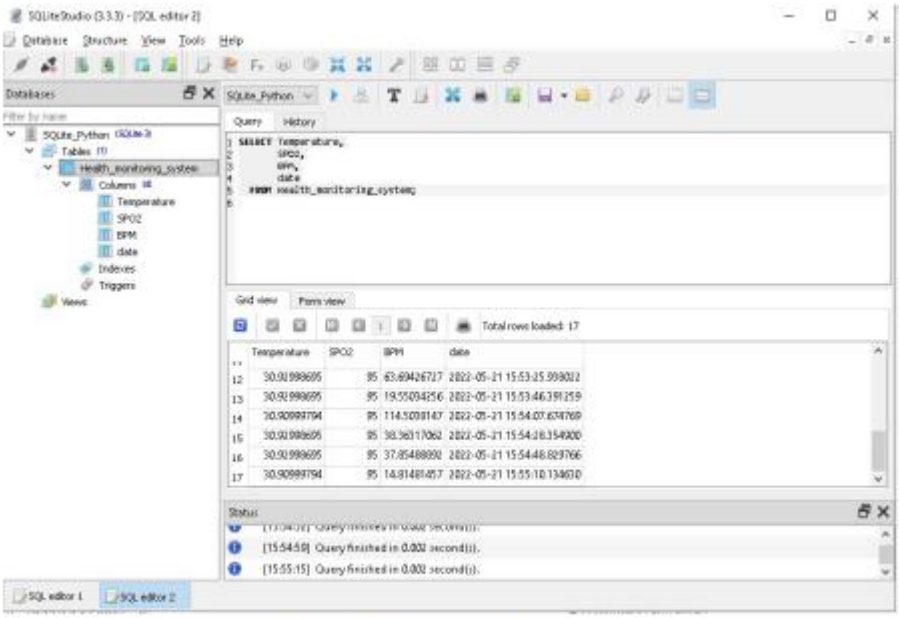

Fig-3.3: Database of IoT Based Health Monitoring System

Table-3.1: Observation table of IoT Based Health Monitoring System

Sr. No.	Person's Age	Expected value			Observed value		
		Temperature (degree celcius)	SpO2	Heart rate	Temperature	SpO2	Heart rate
1	20	37	>95	60-100	37	95	72
2	21	37	>95	60-100	36.5	95	64
3	21	37	>95	60-100	34.8	95	74
4	20	37	>95	60-100	35.6	95	75
5	22	37	>95	60-100	35	95	65

In above table, the measured data is compared with the specified standard values. By comparing the values, condition of patient's health can be monitored. The we can clearly see that the observed values are close to expected values.

Conclusion:

This research has successfully developed a health monitoring system for measuring pulse rate, oxygen saturation, and body temperature. This device could be very useful for doctors to monitor their patients remotely. We used MAX30105 sensor for measuring SpO2 level and heart rate, and MLX90614 sensorfor measuring temperature. We used ESP32 as microcontroller and Wi-fi network to send data on Web-Server and used SQLlite to store data in database.

II. Acknowledgment

We would like to thank the volunteers for the study who participated for testing of system and datacollection. Also,we would like to thank the FountLab Solutions Pvt. Ltd. team and International Institute of Information Technology for providing us valuable inputs.

References:

1. Radwa Sameh, M. Genedy, A. Abdeldayem, Mohamed H. Abdel azeem, Design and implementation of an SpO2 based sensor for heart monitoring using an Android application.
2. T.M. Kadarina and R Priambado, Monitoring heart rate and SpO2 using things board IOT platform for mother and child preventive healthcare.
3. M T Tamam, A J Taufiq and A Kusumawati, Design a system of measurement of heart rate, oxygen saturation in blood and body temperature with non-invasive method.
4. Shubhanvit Mishra, Ch Murali Naga Mahesh, Swayam Shukla, Shilpa Ravula, Shubham Chaudhary, Pranay Ranjan, Low cost IOT based Remote Health Monitoring System.
5. Aldo Novaznursyah Costrada, Azizah Ghina Arifah, Inggi Dwi Putri, I Kadek Agus Sara Sawita, Harmadi, Mitra Djamal, Design of Heart Rate, Oxygen Saturation, and Temperature Monitoring System for Covid-19 Patient Based on Internet of Things(IOT).
6. Sandra Costanzo, Alexandra Flores, A Non-Contact Integrated Body-Ambient Temperature Sensors Platform to Contrast COVID-19.
    a. Idrose2, S. Amirfaiz1, N. A. Roslan1, A. H. Amin3, N. I. M. Fahmy4 and H. A. Rahman1. RELIABLE MONITORING OF OXYGEN SATURATION VIA PULSE OXIMETRY: WHICH SITE TO CHOOSE?
7. Mohammad Monirujjaman Khan ,1 Safia Mehnaz ,1 Antu Shaha ,1Mohammed Nayem ,1 and Sami Bourouis 2, IoT-Based Smart Health Monitoring System for COVID-19 Patients.
8. Mohammad Langri 1*, Sobhan Mokhtarieh 1, Mohammad Mahdi Mir Emami 2, Hesam Aldin Varpaei 2, Chiako Negahdar Panirani2, Designing Pulse Oximeter with the Ability of Measuring Temperature and Sending Information.
9. N. P. Joshi1, P.V.Patel2, LabVIEW and Web-Server based Human Body Monitoring System.