Android based broken wire detector using EMF Technique

Pavan L
Department of Electronics and Communication Engineering
Jyothy Institute of Technology
Bangalore

Mahesh Babu N
Department of Electronics and Communication Engineering
Jyothy Institute of Technology
Bangalore

Yathish G
Department of Electronics and Communication Engineering
Jyothy Institute of Technology
Bangalore

Sharath P
Department of Electronics and Communication Engineering
Jyothy Institute of Technology
Bangalore

Dr Chethana K
Associate Professor, Dept of Electronics and Communication Engineering,
Jyothy Institute of Technology
Bangalore

Abstract –
The system to include an android based broken wire detection which works by detecting the electromagnetic field around a live cable is proposed. The transmission cables undergo stress and strain as they are under the ground. This may lead to short circuits or various kinds of snapping in the wire. If these faults are not treated, it may cause an interruption in the power supply and permanent damage. The proposed method distinguishes the short circuit fault in the underground links. The existing and traditional techniques for detection are reviewed and only the methods for spotting the short circuit error are included. Thus, the proposed system provides a cost-efficient way of detecting the short circuit shortcomings in current conducting cables.

I. INTRODUCTION

In today's world electricity has become a major part. Considering the development in the past years, it is known that this world has evolved a lot as new technologies came up and the old and basic ones were upgraded For all these we supply power using insulated wire where it is covered by the PVC covering for the protection purpose of the user, but some time it becomes a problem. Over the long period some wires would get damaged inside the PVC, which means there will be break down of the wire and stops functioning so here we can replace the wire but sometimes it would be costlier to replace so we need a device to point the exact location of the wire.

II. OBJECTIVE

Our aim is to build a circuit to detect the exact location of breakage of wire inside the PVC cover. This circuit can easily and quickly detect a broken/faulty and its breakage point in 1-core, 2-core, and 3-core cables without physically disturbing wires. To attach our detector circuit to the Bluetooth controlled RC car which can be controlled by our mobile phone.

III. BLOCK DIAGRAM AND GENERAL DISCRIPTION

The coil in the circuit it looks like a coil but it acts as a one side plate oh a capacitor. So, if we increase the area of its surface then there will be more EMF is collected and it works as we increase the surface area.

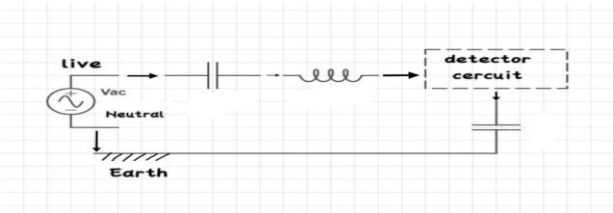

Fig(a)

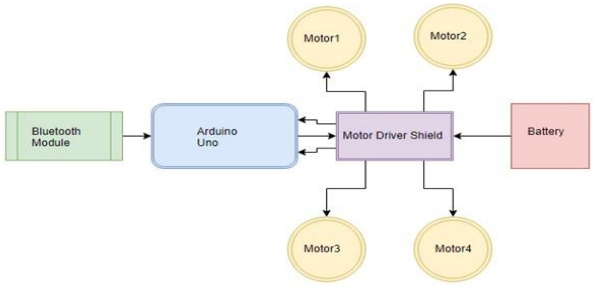

Fig (B)

The live voltage is reference to the earth and there is a very tiny straight capacitance between the earth which can be or the contact with the body to the circuit and with the capacitance between the antenna and the live wire so, here the circuit closes and it can pick up the live voltage. But the transferred EMF to the is very low. So, in order to detect this very low energy voltage source we need to draw a extremely small current from the detector coil Take a closer look on the Fig(b). We could notice the power source, four 18650 batteries connected to the 12V power pin of L298 Motor Drive and ground of Motor Drive and Arduino UNO. This supplies essential power to the circuit. A total of 5 volts is being supplied to this system, where the maximum permissible amount is 12 volts. Digital wires of Arduino are connected with the input1, input2, input3 and input4 of the motor drive. Motors are connected to the both side of Motor Drive which are the outputs terminals. To complete the power source circuit, 5V of Motor Drive is connected to Vin power pin of Arduino UNO.

Followed by this, HC05 Bluetooth Module's vcc is connected to 5V pin of Arduino UNO, which supplies power to Bluetooth Module. Ground to Ground connections are also made. Transistor Transistor logic pins, Transmitter (TX) and Receiver (RX) of Arduino UNO are connected to RXD and TXD of HC05 respectively. The program is uploaded to Arduino before connecting the Bluetooth module.

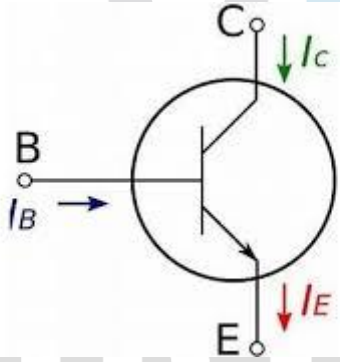

BJT NPN Transistor
Fig(C)

The transistor that we have used in the detector circuit is BJT (bipolar junction transistor). basically, in this type of transistor the current into the collector side is β (beta) times larger than the current into the base side (may be β value can be more the hundreds). According to the NPN transistor configuration β is called as the DC current gain and it is ratio of collector current I_c and base current I_B.

That is β is given by =>

$$\beta = I_C / I_B$$

Therefore, we get collector current as,

$$I_C = \beta * I_B$$

Here β is also known as the H_{fe} which is constant that can be high value (may be in hundreds value). Which means we can start a much larger collector to emitter current? Now from our detector circuit we have the pair of transistors Q_1 And Q_2 these types of pair connection are called as Darlington pair. so, if we need a specific range of output current, we need β times of current in Q_1 and another β times current Q_2.

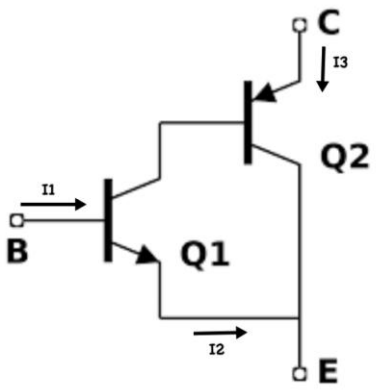

Darlington pair

Fig (D)

According to Darlington pair circuit in fig(D) the base current from the transistor Q1 is equal to β times of emitter current.
So, we can write it has:

$$I_1 = \beta * I_2 \Rightarrow \text{equation(1)}$$

And the I_2 which is the emitter current of Q_1 is interconnected to another emitter that is transistor Q_2. So, the current I_2 is equal to the β times of I_3.
So, we can write it has:

$$I_2 = \beta * I_3 \Rightarrow \text{equation(2)}$$

From equation (1) and equation (2) we can write it has

$$I_3 = \beta^2 * I_1$$

By observing the above equation say that to turn on the capacitor Q_3 we need a supper smaller base current from transistor Q_1 which is base current I_1.

Finally, the combination of Q_1 and Q_2 works as an amplifier and Q_3 transistor works as a switch.

IV. CERCUIT DIAGRAM

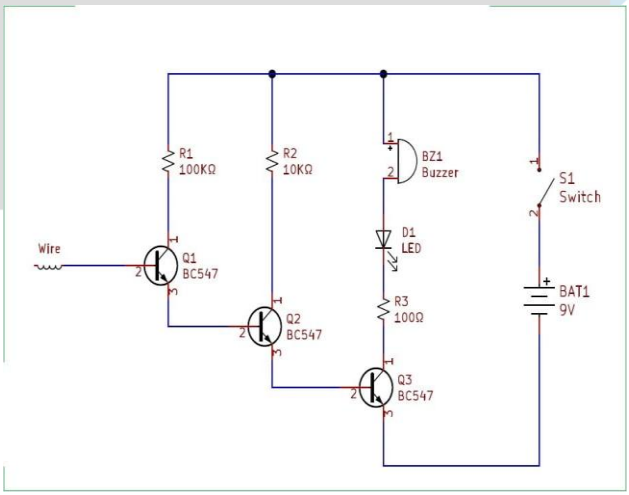

Fig(E)

Above circuit diagram represents our detector circuit

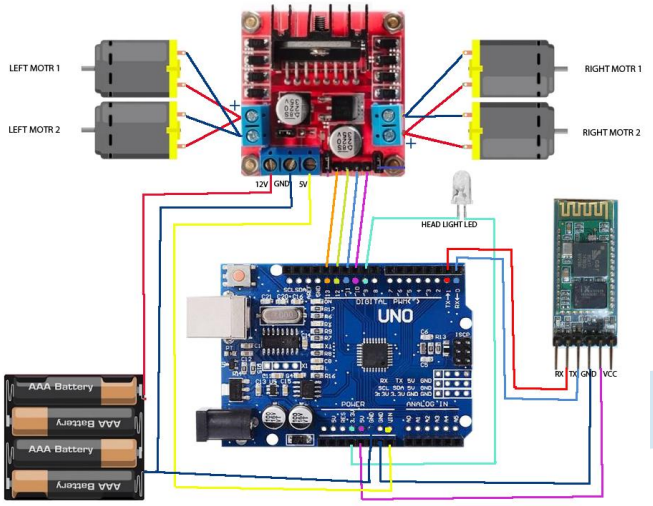

Fig(F)

Above diagram represents our Monitoring unit

C. Abbreviations and Acronyms

Define abbreviations and acronyms the first time they are used in the text, even if they have been defined in the abstract. Abbreviations such as IEEE, SI, MKS, CGS, ac, dc, and rms do not have to be defined. Do not use abbreviations in the title unless they are unavoidable.

D. Equations

1) DC current gain

$$\beta = I_C / I_B$$

where

β = DC current gain
Ic = collector current
I_B = base current

2) collector current

$$I_C = \beta * I_B$$

According to Darlington pair circuit
So, we can write it has:

$$I_1 = \beta * I_2 \Rightarrow \text{equation(1)}$$

I_2 which is the emitter current of Q_1 is interconnected to another emitter that is transistor Q_2. So, the current I_2 is equal to the β times of I_3.

So, we can write it has:

$$I_2 = \beta * I_3 \Rightarrow \text{equation(2)}$$

From equation (1) and equation (2) we can write it has

$$I_3 = \beta^2 * I_1$$

By observing the above equation say that to turn on the capacitor Q_3 we need a supper smaller base current from transistor Q_1 which is base current I_1.

Finally, the combination of Q_1 and Q_2 works as an amplifier and Q_3 transistor works as a switch.

V.HARDWARE IMPLEMENTATION

As shown in Fig, there is a probe which is connected to the Transistor BC057. This probe is made out of copper metal and acts as an antenna in receiving the signals from the cable. These signals are electromagnetic radiations emitted to the surroundings from the cable.

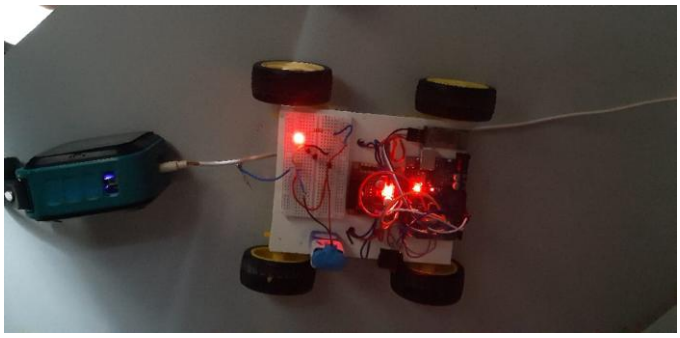

Fig(1)

According to the requirement if the frequency of the emitting cable is low the length and thickness of the probe are to be adjusted and made higher. Fault detection makes it easy for tracing the exact fault location and distance. It is more compact and reliable thus helps in saving time. As mentioned earlier, it is cost-efficient. Therefore, it helps in reducing unnecessary expenses. Also, it requires low maintenance and operating cost as the damage rate is low.For experimental purposes, the cable kept below the detector unit as shown in Fig 1 and 2-meter cable was used. The cable is made as open after 1.5m. The cable was connected with the power line and the LED will tun ON.

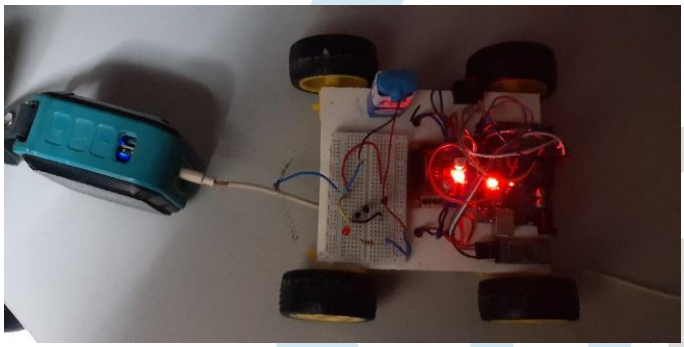

Fig(2)

For other experimental purposes, the cable kept below the detector unit as shown in Fig 2 and 2-meter cable was used. The cable is made as open after 1.5m. The cable was connected with no power line and the LED will tun OFF.

ACKNOWLEDGMENT

I would like to express my special thanks of gratitude to my Lecturer Dr Chethana ma'am who gave me the golden opportunity to do this project on the topic Broken Wire Detector. It helped in doing a lot of research and we came to know about a lot of things related to this topic.Finally, I would also like to thank my parents and friends who helped me a lot in finalizing this project within the limited time frame.

.REFERENCES

[1] The research on cables on cable broken wires inspection for a cable stayed bridge by discrete wavlet transformation. In the year 2011. The authors are G.Wang, Jialin Li Chao Yu. The experiment results have showed that it will be obtained the information of fault degree and location to the Checked cable by the new approach, so that the credible proof will be given about detection and analysis to the broken wires.

[2] A broken wire detector for electrical appliances.in the year 2014.The authors are H Suleiman, M. Othman, M.M. Ismail, Jeevan Chandra Sagan The power cable wires are exposed to mechanical strain and stress, which can result in short circuiting or internal snapping or of wires at any point due to prolonged duration usage. They created a circuit which can be easily identify the exact location of the broken wire called it as iwire .

[3] Efficient android based invisible broken wire detector. In the year 2021. The authors are V Jegathesan, T Jebaseeli, D David. The system to include an android based underground broken wire detection which works by detecting the electromagnetic field around a live underground cable is proposed and provides a cost-efficient way of detecting the short circuit shortcomings in underground cables.

[4] Mohammed basha, T Govind, P Guru Murthy Reddy, "In this paper they used the wide application of embedded system and using one of the i.e., Arduino they developed a system of finding exact location of underground cable fault and also gave the result".

[5] Dr Chethana K Associate Professor, Dept of Electronics and Communication Engineering, Jyothy Institute of Technology Bangalore.