"Study and Performance Analysis of ATFD Different Feed Water Parameter"

MR.R.BHARANITHARAN[1], MR.S.NAVANEETHAKRISHNAN[2], MR.R.SASIKUMAR[3]

[1] *PG Student, Manufacturing Engineering, Erode Sengunthar Engineering College,Erode, Tamilnadu, India-638057*

[2] *Professors, Department of Mechanical Engineering, Erode Sengunthar EngineeringCollege, Erode, Tamilnadu, India-638057*

[,3] *Assistant Professor, Department of Mechanical Engineering, Erode Sengunthar EngineeringCollege, Erode, Tamilnadu, India-638057*

Abstract —In this project, Agitated thin-film dryers (ATFDs) are used to produce dry free-flowing powder from slurry/solution-type feed and widely implemented in textiles dyeing units, pharmaceutical, chemical, food industries and metal industries. The feed passes through the ATFD in several forms such as solution/slurry and successively becomes paste, wet powder, and dry powder. The flow of feed in the ATFD undergoes a helical path (combination of rotational velocity imparted by the agitator/blade and axial velocity of feed) while flowing through the annular part of the dryer. The ATFD is described different water parameter to study and Performance Analysis machine and improve the machine efficiency and machine maintenances cost and improves textiles industrial growth in practical and geometrical calculation to be solved.

Keywords: - **Heat Transfer, ATFD, Effluent Treatment Process (ZLD)**

IndexTerms – INTRODUCTION , PROBLEM DEFINITION , WORKING PRINCIPLE ,

1. INTRODUCTION

Evaporators are used in a wide range of processes including Pharmaceuticals, textiles dyeing, foods and beverages, metal industries, pulp and paper, chemicals, polymers and resins, inorganic salts, acids, bases, and a variety of other materials. There are many types and variations of evaporators and the best for a particular application depends on the product characteristics and desired results. Evaporation is an operation used to concentrate a solution of a nonvolatile solute and a volatile solvent which in many pass is water. A portion of the solvent is vaporized to produce a concentrated solution, slurry or thick & viscous liquid. An evaporator consists of heat exchanger or a heated bath, valves, manifolds, controls, pumps, and condenser.

The most common designs are jacketed pans, tubular heat exchangers, and plate and frame heat exchanger and agitated thin film evaporator. An **AGITATED EVAPORATION MACHINE** is one of the most significant steps towards it. An agitated thin film evaporator is a recent technology used to dry the concentrated solution of essential solids so that moisture is evaporated & dry powder of solid is obtained.

2. PROBLEM DEFINITION

Technical problems can arise during evaporation, especially when the process is applied to the Textile dyeing industry. Some evaporators are sensitive to differences in viscosity and consistency of the dilute solution. These evaporators could work inefficiently because of a loss of circulation. The pump of an evaporator may need to be changed if the evaporator needs to be used to concentrate a highly viscous solution.

Fouling also occurs when hard deposits form on the surfaces of the heating mediums in the evaporators. In Textile dyes, sodium chloride can create such deposits that reduce the efficiency of heat transfer. Foaming can also create a problem since dealing with the excess foam can be costly in time and efficiency. Antifoam agents are to be used, but only a few can be used because costly chemicals. Corrosion can also occur when acidic solutions such as citrus juices are concentrated. The surface damage caused can shorten the long-life of evaporators. Machine efficiencies depend on feed water different parameter , and maintences rate and operating producers , steam consumption.

3. WORKING PRINCIPLE

Agitated Thin Film Evaporator- Vertical In a vertical dryer, the rotor blades are hinged. The feed enters the shell tangentially and gets spread along the inside surface of the shell into a thin film. The hinged rotor blades keep the film under intense agitation preventing any scale formation. The feed progressively passes through different phases like liquid, slurry paste, wet powder and finally powder of the desired dryness. The vapours flow counter current to the film. The powder gets collected in a powder receiver at the bottom.

Agitated Thin Film Dryer- Horizontal orientation is required when the feed is in the form of a thick slurry, paste or wet powder. The fixed clearance rotor with screw elements prevent scale formation and convey the material from the feed end to the powder discharge end in a continuous fashion.

Agitated Thin Film Evaporators- The Agitated Thin Film Evaporator comprises two major assemblies a jacketed shell precision machined from the inside. A rotor assembly has revolves at high speeds while closely fitting the shell. The feed enters the shell tangentially and spreads along the periphery ought the distributor. The rotor blade tips slides with a close clearance with the wall and spread the feed uniformly on the heated surface into a thin film and then agitate it. The heating medium provides the necessary heat for evaporating t he volatile component of the feed. The vapour transmits counter current t o the film and gets cleared in the entrainment separator before being left through the vapour nozzle. The concentrated product leaves the evaporator bottom through the concentrate nozzle

4. EXPERIMETAL SETUP

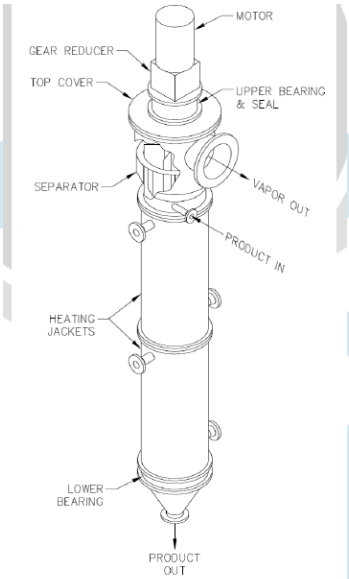

Fig-1: Agitated thin film dryer

A schematic diagram of the experimental setup is shown in the figure
1. The main components of the ATFD are sequentially

1. Motor,
2. Gear Reducer,
3. Top Cover,
4. Upper Bearing,
5. Top Plate,
6. Separator,
7. Vapour Out,
8. Product In,
9. Heating Jacket,
10. Lower Bearing &
11. Product In. Agitated thin-film evaporation has been very successful with difficult-to-handle products. Simply stated, the method quickly separates the volatile from the less volatile components using indirect heat transfer and mechanical agitation of the flowing product film under controlled conditions. The separation is normally made under vacuum conditions to maximize ΔT while maintaining the most favorable product temperature, and to maximize volatile stripping and recovery

DESIGN OF AGITATED THIN FILM EVAPORATOR

Process Design-Among the needed physical-property parameters are the latent heat of vaporization, viscosity, thermal conductivity, specific heat and density, of both the heating medium and the process fluid. Additional process-fluid data needed are its solids content, fouling tendencies, & thermal sensitivity

Design Calculation for Evaporator:

Feed Condition for ATFD:

Feed inlet flow Rate F = 600 kg/hr = 0.519m3/hr = mf,
Temperature T =70°C =273+70 = 343 K,
Solid % =28.57 %,
Total Solids in Feed = m' =136 kg,
Remaining Water = m_v =464 kg,
Inorganic Salts in Feed,
Ammonium Chloride =44.8 kg,
Sodium Chloride =43.8 kg,
Magnesium Bromide =47.4 kg.

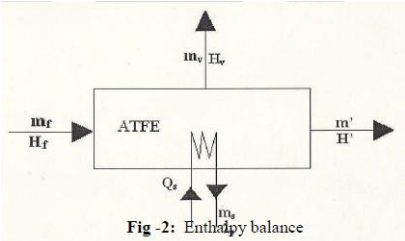

Fig -2: Enthalpy balance

Enthalpy Balance over the ATFE

$m_fH_f + m_s\lambda_s = m_vH_v + m'H'$.....(1)
Now, $H_r=(C_p)_f * T_f$.....(2)
$(C_p)_f=\Sigma_{xi} C_{pi}$.....(3)

Weight Fractions:-
X_{NH4Cl} = 44.8kg/600kg=0.075
X_{MgBr2} = 47.4kg/600kg = 0.079
X_{NaCl} = 43.8kg/600kg = 0.073
X_{H2O} = 464kg/600kg = 0.7733

Heat Capacity of Components:
For NH4Cl
C_p = 9.80 + 0,0368
T = 9.80 + 0,0368 (343)
= 22.4224
$(C_p)_{NH4Cl}$ = 22.4224 cal/(mole.K) = 5.02128 Kj/kg.K

For NaCl
C_p =10.79+0.00420
T =10.79+0.00420(343) ,
= 12.2306
$(C_p)_{NHCl}$ =12.2306 cal/ (mole.K) = 2.995 KJ/ (kg.K)

For MgBr2

C_p =17.3+0.00377
T =17.3+0.00377(343)
= 18.5931
$(C_p)_{MgBr2}$ =18.5931 cal/ (mole.K) = 14.33 KJ/ (kg.K)

For H20
$(C_p)_{H2O}$ = 4.1967 KJ/(kg.K)
Hence from equation (3),
(Cp)f = ΣxiCpi
= 0.075(5.02128) + 0.079(14.33) + 0.073(2.995) + 0.7733(4.1967)
(Cp)f = 4.9726 KJ/(kg.K)
Also from equation (2),
Hf = (Cp)f * Tf
= 4.9726 * (343-373)
Hf = -149.178 KJ/kg
Now,
λ_s at 70°C = 2163.22 KJ/kg
H_v at 70°C = 561.44 KJ/kg
Now, for dried solids
$C_{p'} = \Sigma x'_i * X(C_p)_i$

Where,
X'_i = Weight Fraction on Moisture Free Basis.
X''_{NaCl} = 44.8/136 = 0.329
X_{MgBr2} = 43.8/136 = 0.322 = 47.4/136 =0.349
Now,
C_p' = Σx'i * X(Cp)i

= 0.329 * 5.02128 + 0.322 * 2.995 + 0.349 * 14.33

C_p' = 7.618

H' = 7.618 * (343-373)

= - 228.54 KJ/kg

Hence, from equation (1),

$m_f H_f + m_s \lambda_s = m_v H_v + m'H'$

600 * (-149.178) + ms * (2163.22) = 464 * (561.44) + 136 * 7.618 * (343-373)

Hence,

M_s = 147.43 kg/hr

Hence, Steam required is approximately 600-147.43=460kg/hr.

Designs for Agitator

F = 0.5190 m^3/hr

A = 3.14 * d^2/4 = (3.14 * $(0.2)^2$) / 4 = 0.0314 m^2

Velocity of feed stream is,

V = F/A

= 0.5190/0.0314 = 16.53m/min = 0.27m/s

Now,

Reynolds Number is given as,

N_{Re} = ρ v d/μ.

N_{Re} = (1.156* 0.27 * 0.2) / (13.61 *10^{-3})

N_{Re} = 4.2468

Now,

Power Number is related to Reynolds Number as,

N_P = 203 * $(NRe)^{-1}$ for 2< NRe< 60

= 203*$(4.2468)^{-0.1}$

N_P = 47.8

Power Number is given as,

N_P = P / (ρ * N3 * d5)

P = NP x ρ * N3 * d5

= 47.8 * 1156 * 33 * (0.21)5

P = 609.32 watts = 0.82 hp

Hence,

Power required is approximately 1 hp.

Designs for Shell

Working Pressure = 3 kg/cm2 + vacuum

Now, Thickness is given as,

t = PR / (SE-0.6P)

Where,

P - Design pressure, R - inside radius,

S = allowable stress, E = joint efficiency

Assuming design pressure is 20% of Working Pressure.

P =1.2 * 3 = 3.6kg/cm2

Now,

Assuming mild steel as a material of construction,

S = 1200 kg/cm2 •

E = 0.7,

Let the Diameter of Shell be 200 mm & Corrosion allowance as 3 mm.

Radius R = [200+ (2 * 3)] / 2 = 103 mm = 10.3 cm

t = (3.6 * 10.3) / [(1200 * 0.7) - (0.6 * 3.6)]

t = 37.08/(840-2.16) t = 0.04426 cm = 0.4426 mm

t = 3+0.4426 mm = 3.4426mm

t = 3.4426mm

Hence, Thickness of shell is approximately 5 mm.

Designs for Jacket

Assume Pressure = 5 kg/cm2

Gap between Shell and Jacket is 20 mm.

Internal Diameter = 200+ (2 * 5) + (2 * 20) =250 mm

Radius R_j = 125 mm = 12.5 cm

Hence Thickness of Jacket is,

t = (5*x 12.5) / [(1200 * 0.7) - (0.6 * 5)]

t = 62.5 / (840-3) \
t = 0.07467 cm = 0.7467 mm
t = 3+0.7467 = 3.7467 mm
t =3.7467mm

Hence, Thickness of Jacket is approximately 5 mm.

Designs for Spring

We select the helical Torsion spring.

θ= 30° = 0.5235 radian
T = m = 534.4191 N.mm
6b = 201.624 N/mm^2
Spring Index = 21

$$Kw = \frac{C*(4C-1)-1}{C*(4C-4)} = \frac{21\ (4 \times 21-1)}{21*(4*21-4)}$$

Kw = 1.037
6b = Kw * (32m) / (π*d3)
201.624 = 1.037 * (32 * 534.4191) / (3.14 * d3)
d3 = 27.99947
d = 3.036 mm
D/d = 21
D/3.036 = 21
D = 63.766 mm
(We select standard helical spring. 3mm (d) and 62 mm (D).)

Type of textile ETP plant water

Generally used three type of water used treat water in textile ETP plant. It is classified into mixing water parameter based

A) Chloride plant
B) Sulfate plant
C) Combined salt (chloride and sulfate)

Chloride plant :

"$Nacl_2$ + HCl -------→ NaH^+ + Cl_2^- "

$NaCl_2$ -→ sodium chloride used to inner plate like textile processing chemical used on solvent .
HCl -→ hydro choric acid used ETP water treatment using chemical.
NaH+ → sodium hydroxide escaped environments it like a from sludge and other form vapouriesed state and few amount escape in final deposited salts.
Cl_2 → chloride deposited in final stage of salt .

Sulfate plant:

"$NaSo_4$ + $CaCo_3$ ----→ $(NaCo_3)^+$ + Ca^- + So_4^-"

$NaSo_4$ -→ sodium sulfate used to inner plate like textile processing chemical used on solvent .
$CaCo_3$ -→ Calcium Carbonate used ETP water treatment using chemical. It called as limestone (lime soda)
$(NaCo_3)^+$ → sodium carbonate escaped environments it like a from sludge and other form vapouriesed state and few amount escape in final deposited salts.
Ca^- → Calcium ion mixed of ETP water it is hardness water condition. Hardness measure in water mg^+ and ca^+ generally hardness tow type .

a) **Temporary hardness**
b) **Permanent hardness**

Temporary hardness

the presence in water of mineral salts (calcium and magnesium) that are removed by boiling.

Permanent hardness

Permanent hardness of water is due to the presence of chlorides and salts of calcium and magnesium. it is without remove boiling condition.

Combined salt (chloride and sulfate)

"$NaSo_4$ + 2HCl -→ NaH_2^+ + So_4 + Cl_2

$NaSo_4$ -→ sodium sulfate used to inner plate like textile processing chemical used on solvent.
HCl -→ hydro choric acid used ETP water treatment using chemical.
NaH+ → sodium hydroxide escaped environments it like a from sludge and other form vapouriesed state and few amount escape in final deposited salts.

Cl_2 & So_4→ chloride and sulfate deposited in final stage of salt.

Feed water parameters

	ATFD FEED WATER PARAMETERS				
S.NO	**Sample**	**PH**	**TDS (gpl)**	**Specific Gravity**	**Total Solid in Kg/hr (Recovery)**
1	**Sample-A**	**6.5-7**	**180000**	**1.15**	**150kg**
2	**Sample-B**	**7-7.5**	**225000**	**1.2**	**200kg**
3	**Sample-C**	**7-8**	**280000**	**1.22**	**220kg**
4	**Sample-D**	**6-7**	**320000**	**1.24**	**240kg**

MACHINE DETAILS:

1) Feed water contact area : Main shell MOC SS316/SS316Ti
2) Inner rotor / blade drum : inner shell MOC SS316/SS316Ti
3) Steam shell : outer shell MOC MS/SS304

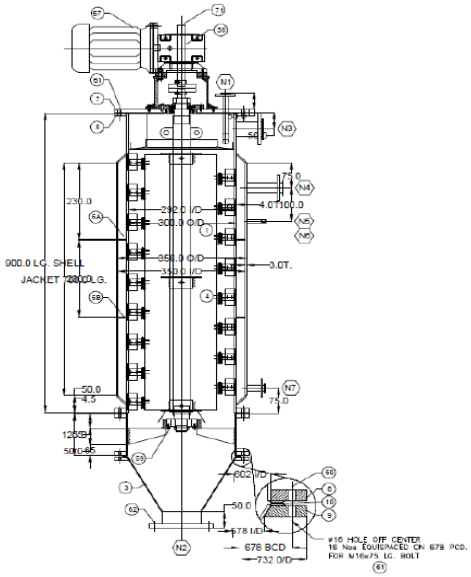

Fig-3 : CAD ATFD

5. CONCLUSION

The mechanical & process design for agitated thin film evaporator is proven & reliable, and should be considered whenever an application proves difficult for conventional evaporators. Currently they are often used as "finishers" when high concentration of solids required. Thus, in future **AGITATED EVAPORATION MACHINE** "will find applications in various processes. The suitability of the ATFE for the various parameters such as viscosity, high capacity, & temperature variations puts it in front of various other conventional evaporators.In these ATFD system best performances can provide on this machine heat transfer area. If high surface area then can be given large amount of dry power or dry slurry power.To reduced correction which is preferable for material of construction Feed water contact area: Main shell MOC SS316/SS316Ti and Inner rotor / blade drum: inner shell MOC SS316/SS316Ti and Steam shell : outer shell MOC SS304 because this material for higher correction range. To be change heating medium like steam convert to thermic oil substances because steam @ operating pressure temperature 151° C at same operating thermic oil temperature range 385–390°C .

REFERENCES

[1] Bhushan M. Thengre1, Sulas G. Borkar2 “Design And Fabrication Of Agitated Thin Film Dryer” Vol-3 Issue-6 2017

[2] Sanjay B. Pawar a, A.S. Mujumdar b, B.N. Thorat, Artical on “ Chemical Engineering and Processing”, 2011

[3] McCabe W.L., and Smith J.C., "Unit Operations of Chemical Engineering," McGraw-Hill Publication

[4] Clinton C.H., Kirkpatrick S.D., Perry's "Chemical Engineer's Handbook," 7th Ed., McGraw-Hill Publication.

[5] Freeze H.L., and Glover W.B., "Mechanically Agitated Thin Film Evaporators", Chem. Engg. Process.

[6] Joshi M.V. & Mahajani V.V., "Process Equipment Design", Macmillan India Ltd. g. Dawande S. D., "Process Design of Equipments", Central Techno Publications, Nagpur, India.