DRIVER ALCOHOL AND DROWSINESS DETECTION SYSTEM

[1] KARTHIKEYAN B, [2]NARAGAM KIRAN GANESH, [3]NEERUKATTU MALYADRI NAIDU, [4]GANGULA YASWANTH, [5]SAI SRINIDHI KAMARSU
[1]Associate professor, [2]Student, [3]Student, [4]Student, [5]Student
NARAGAM KIRAN GANESH,
Machilipatnam, Andhra Pradesh, India

***Abstract*—This Using GPS, GSM, and a GSM module, the vehicle accident alert system transmits an alarm message that includes the accident's location. Our daily lives are now simpler because of technological advancement. In the same way that every coin has two sides, technology offers advantages and disadvantages. The rate of road accidents, which result in significant impending death, has increased because of the advancement of technology. This predicament is only made worse by the subpar emergency services delivered in our country. We'll offer a remedy for this issue throughout our project. The driver's tiredness and yaw score will be continually monitored by our central monitoring system. The primary goal of this project, then, was to prevent accidents caused by driver error. With the aid of the project, we can now increase safety resulting from motorists who have been exhausted at the operation.** *(Abstract)*

***Index Terms*— Vibration sensor; Alcohol detection; Display board; GSM Module; Relay module; GPS Module.** *(key words)*

Introduction

Road accidents and traffic risks together have increased due to the rising demand for automobiles. People's lives are at grave danger. This is a result of the lack of the greatest emergency facilities in our nation. This research proposes an automatic alarm system for auto accidents. This concept is a system that can identify accidents in a lot lesser duration and delivers the important information to a first aid facility in a matter of seconds, including the position, the instant the accident happened, and the angle at which it actually occurred. This warning notification is quickly transmitted to the rescue worker, helping to save vital lives. In order to stop delivering messages, a Switches is also provided. This can conserve the medical rescue team's time and effort in the rare circumstance if there are no fatalities. The alarm message is automatically conveyed to the police station and the rescue crew when an incident occurs.

The message is conveyed using a GSM module, and a GPS module is used to find the accident's location. The vibration sensor can be used to accurately identify the accident. When you need to identify a vibration or a knock, a vibration sensor (Piezo constituents) is useful. By monitoring the voltage at the output, one may relatively simple utilise these as tap or knock sensors.

The Raspberry Pi controller receives the data from the vibration sensor. The GSM modem used mostly by Raspberry Pi controllers to send the destination alarm message. If a minor accident occurs, the driver can signal that additional attention is needed by trying to turn off the message. To minimize wasting the medical and enforcement team's time. A GSM modem is a mobile phone equivalent without the monitor, keypad, and speakers. This employs a SIM card and is supplied by a phone company subscription.Thus according studies, the accident happened because the drunk driver wasn't wearing a seat belt properly. Prior to the car starting, this system will verify all of the following items. The abovementioned issues will be systematically addressed by our automatic accident detection system. The current system merely checks the seat belt situation and doesn't have many security restrictions. This system states that wherever and whenever a person sits in the driver's seat of a vehicle, the system examines the driver for the following parameters. The Alcohol Measurement device the degree to which the subject has ingested alcohol. The vibration in the vibration sensor increases beyond the limit in the occurrence of any accident and a message has been transmitted to the GSM module. The GSM can interface with both the proper authorities. Thus, this organization guarantees the security and humankind.This GSM gigabit router accident detection and car message system uses a vibration sensor to detect injuries. When you need to identify a vibration or a knock, a vibration sensor (Piezo components) is useful. By monitoring the voltage at the output, one may pretty straightforward utilise these as tap or knock sensors. The Raspberry Proposed controller receives the message from the vibration sensor. The GSM modem used by Raspberry Pi controllers to send the area alarm message. If a minor accident occurs, the driver can signal that no additional needed attention is required by turning off the message. In aim to save the medical team's and police team's time, this is being done. A GSM modem is a mobile phone substitution without the displays, keypad, and speakers. This utilises a SIM card and is supplied by a wireless carrier subscription.

BLOCK DIAGRAM:-

Fig-1

A. Alcohol and accident detector

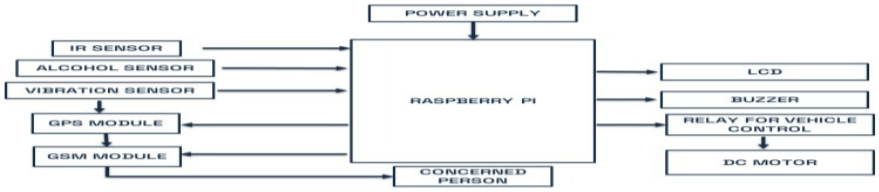

Fig-2

B. Drowsiness and yawning detector

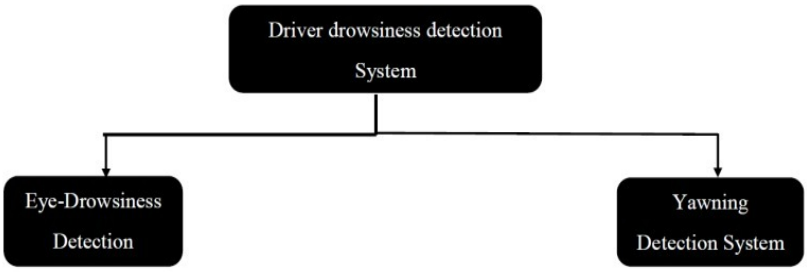

Working:

Alcohol and Accident Detector:-

The Raspberry Pi will serve as our primary controller. Afterwards when, an IR sensor will determine whether or not a person is wearing a seatbelt. The automobile will only start if indeed the seat belt is detected. The seat belt is not detected message will be displayed on the LCD, the buzzer will activate, and the car won't start if the person wasn't wearing a safety belt. Once a seat belt is registered, the system uses an alcohol detection sensor to determine whether or not the user has experienced some form. If the person drank alcohol, the system would have shown it on the LCD and prohibited the automobile from starting (it means the Relay motor will not rotate). A vibration analyzer will distinguish the message to the MCU and broadcast the vibrating signal. A vibration sensor is used to ascertain that whether accident has occurred. When an accident occurs, a vibration sensor uses a GPS module to pinpoint the position and a GSM module to transmit a signal.

Drowsiness and Yawning Detector:-

The approaches we performed to detect the driver's level of drunkenness. trying to establish the eye-threshold value -
The aspect ratio of the eye's reference value was as described in the following: Major consideration Ratio.

Fig-3

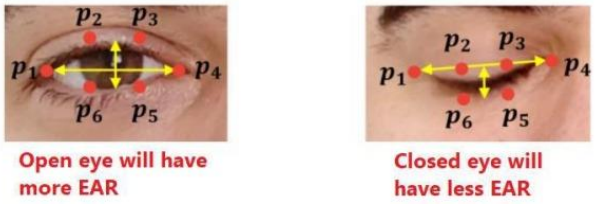

If these eye coordinates can be found, with P1, P4, and P2, P3, P5, and P6 being the intermediate locations in the eyelid and the extreme end points of the eye, respectively, then the aspect ratio is determined as EYE-ASPECT RATIO FORMULA= (|P2-P6|+|P3-P5|)2+|P1-P4|
The aspect ratio is continuously tracked, and when it falls below a specified point, the user is presumed to be drowsy.

FLOW CHART

Alcohol and accident detector:

Fig-4

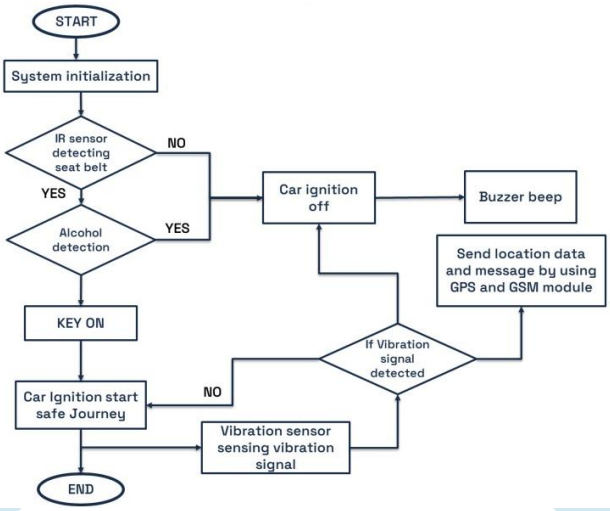

The recommended system's flow chart is shown above. We detailed the opening series of the from the commencement to the very finish, design When a car first commences, it will only move forward when the driver is wearing a seatbelt. starting, it will check the driver for alcohol intake; if so, it will proceed. The ignition will automatically cut off, which means the automobile won't start or run. In the event of an accident, if the car comes into contact with another vehicle or an object, if you cause some vibration, the vibration sensor will be able to detect it. sending the message to the Raspberry Pi through a vibrating signal. once the When a vibration sensor receives a signal to the Raspberry Pi, it immediately passes the location and message by the GSM modem will begin its process following introducing the GPS module to the GSM modem. Here, we send Emails and texts to the family members and the rescue crew and to use a GSM modem. A buzzer can also be used to broadcast a beep to communicate that an accident has occurring. Thus, the life of a person involved in the accident has been located, safeguarding both of their existence.

EYE-DROWSINESS DETECTION SYSTEM:-

Fig-5

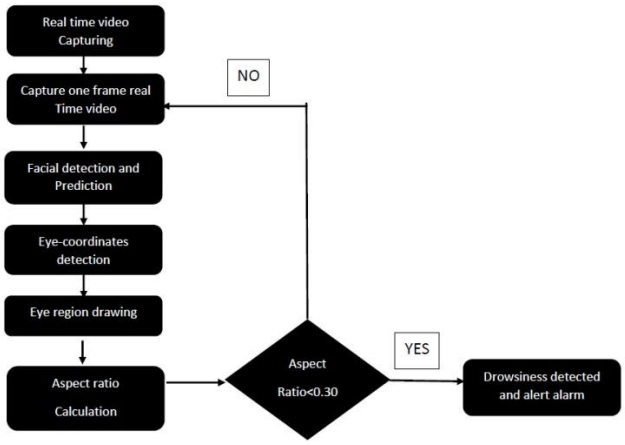

The driver is seated in front of the eye drowsiness detection system, which records real-time video of the driver. After that, it takes an image frame out of the video for subsequent editing. The driver's facial region is first assessed, then the driver's eye region. From the detected area, the eye surrounding coordinates are taken out and drawn for display in the output window. The aspect ratio of the eye is generated using these coordinates. The aspect ratio is then juxtaposed with a predetermined threshold value (0.30), below which the driver is identified as being sleepy and cautioned by an alarm, otherwise the procedure is repeated again.

YAWNING DETECTION SYSTEM

Fig-6

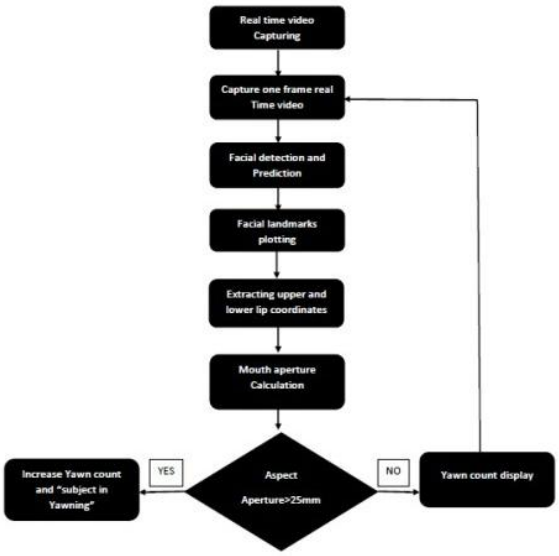

The real-time collected video is also used by the yawning detection algorithm to extract image frames. Afterwards when, the face region is found and projected. The mouth and eye region, often known as facial landmarks, are marked and annotated. The midpoint annotation of the upper and lower lips is identified for the primary detection, and their Euclidean distance is calculated. The statement "Subject is Yawning" is printed and the yawn count is increased and shown if the Euclidean distance is above a specific threshold (25 mm); alternatively, the operation is repeated.

CIRCUIT DESIGN

Alcohol and Accident Detector:-

Fig-7

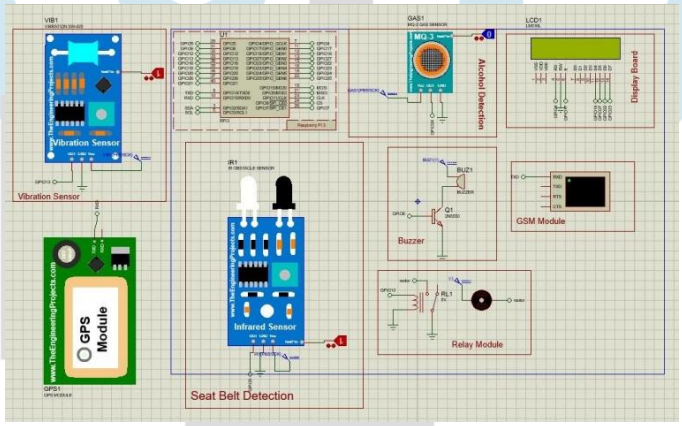

Fig-8

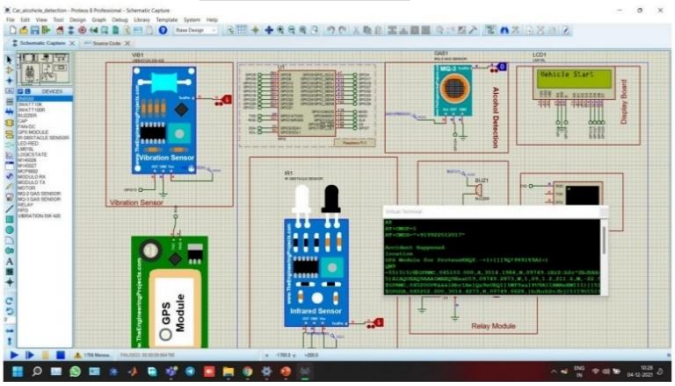

Fig-9

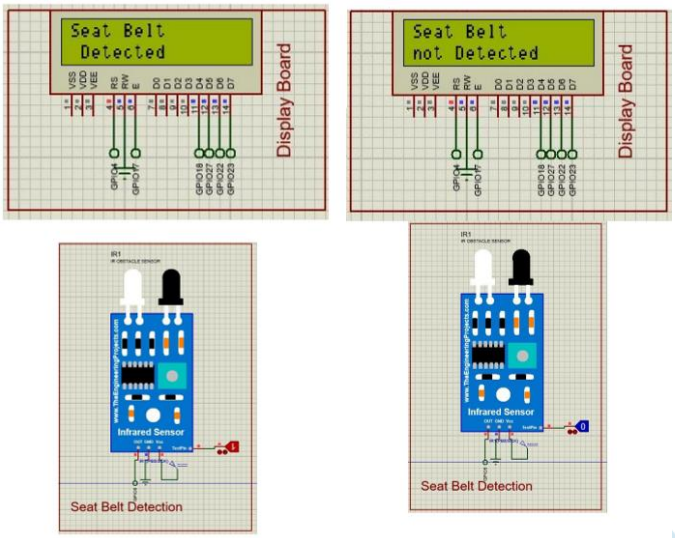

Because we haven't sent the IR sensor even one signal, the message "Seat belt not detected" appears on the LCD. The LCD displays the message "seat belt detected" as soon as we send the IR sensor 1 signal.

Fig-10

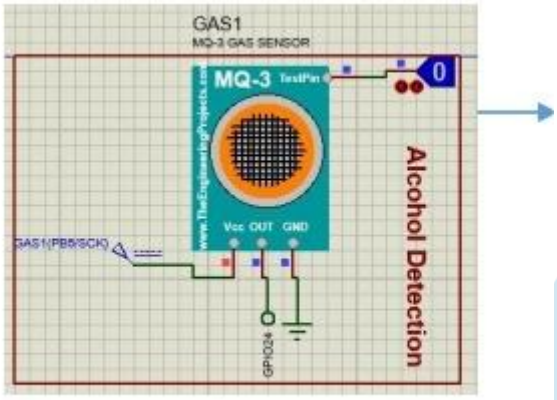

Because we didn't send the MQ-3 sensor even one signal, the selt belt detection system checks that alcohol is not detected after that. Car will now start.

Fig-11

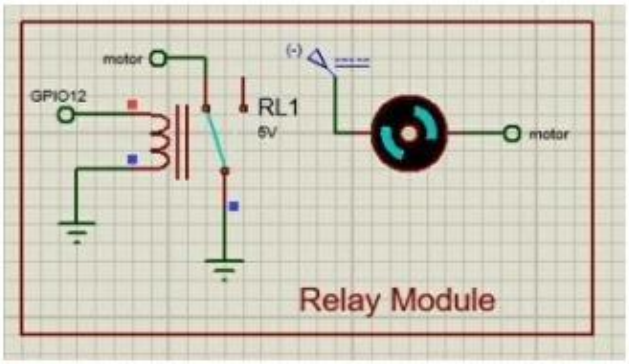

When we activate the MQ-3 sensor, a "alcohol detected" message will be displayed on the LCD and the car didn't continue.

Fig-12

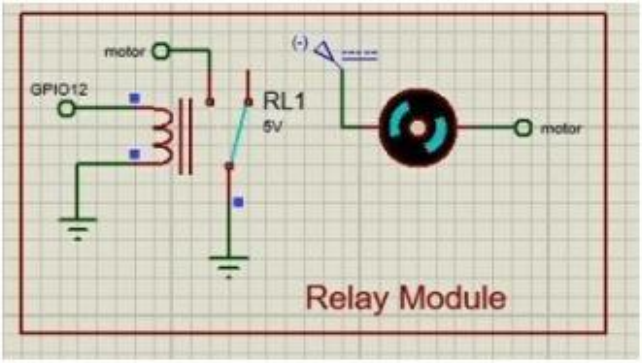
motor
GPIO12
RL1
5V
(-)
motor
Relay Module

Fig-13

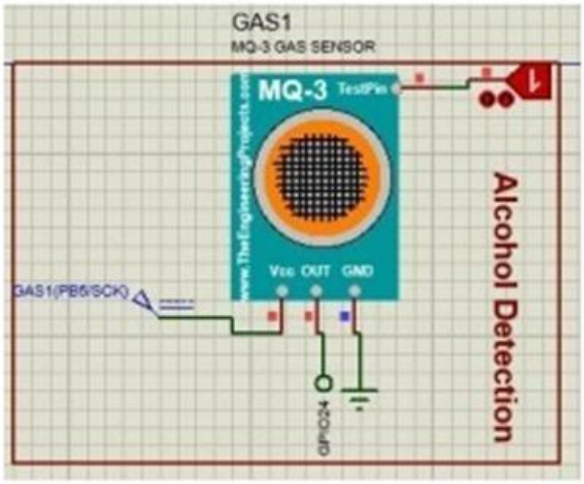
GAS1
MQ-3 GAS SENSOR
MQ-3
TestPin
Vcc OUT GND
GAS1(PB5/SCK)
GPIO24
Alcohol Detection

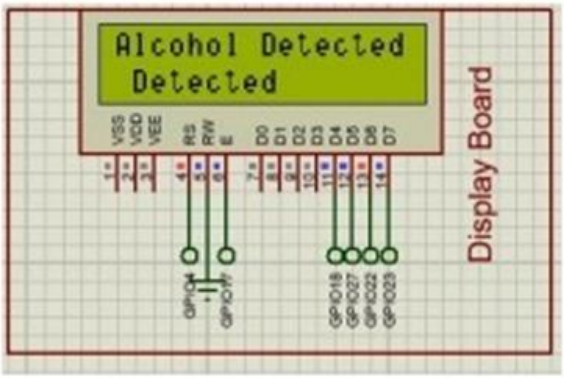
Alcohol Detected
Detected
VSS VDD VEE RS RW E D0 D1 D2 D3 D4 D5 D6 D7
GPIO4
GPIO17
GPIO18
GPIO27
GPIO22
GPIO23
Display Board

Fig-14

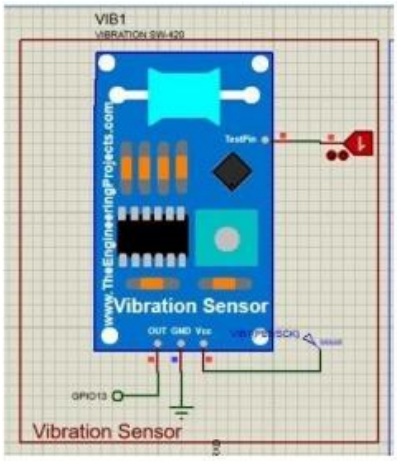

Here the signal is 1 ..accident happened msg and location will send to given number.

Fig-15

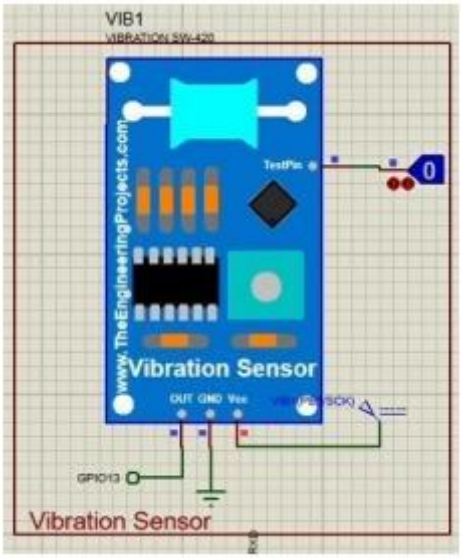

Fig-16

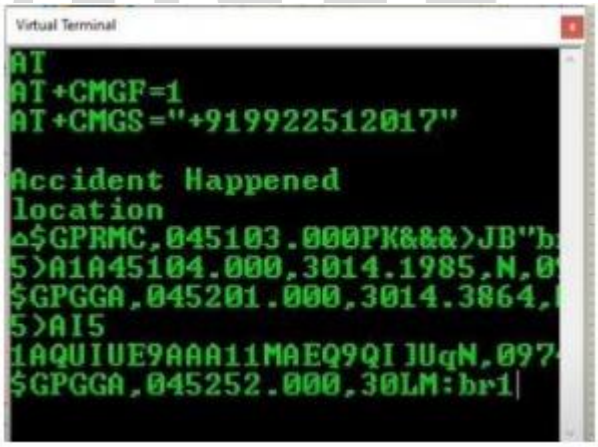

COMPONENTS:-

RASPBERRY PI
BUZZER
LCD SCREEN
IR SENSOR
ALCOHOL SENSOR

VIBRATION SENSOR
GPS AND GSM MODULES

SOFTWARE USED:
-
PROTEUS

METHODOLOGY
Alcohol and Accident Detection:-
Block diagrams are used to represent the Complete Setup.
Uses an IR sensor to find the seat belt and an alcohol sensor to find the driver's blood alcohol level. The Raspberry Pi is informed when an accident occurs for the first time thanks to a vibration sensor.
GPS is used to ascertain the Latitude and Longitude, which are then transmitted to the rescue crew through GSM. The module has a pre-stored copy of the message receiver number.
Drowsiness and Yawning Detector:-
In the flowchart elsewhere here, you can see that we pretty much exclusively used the eye-drowsiness and yawning detection techniques for detecting driver drowsiness due to their being more effective than the various methods and allowed us to organization and planning only at the time of detection. For this project, we chose those certain methodologies placed above a white pulse rate monitoring and central surveillance systems.

RESULTS
Drowsiness Detector
Main Detection Concept:- Aspect ratio is the criterion used to determine eye sleepiness. Fundamentally, it is the ratio of eye length to eye width. When the aspect ratio falls below a specific threshold, the eye is believed to be drooping and the person therefore is considered to be drowsy.

Fig-17

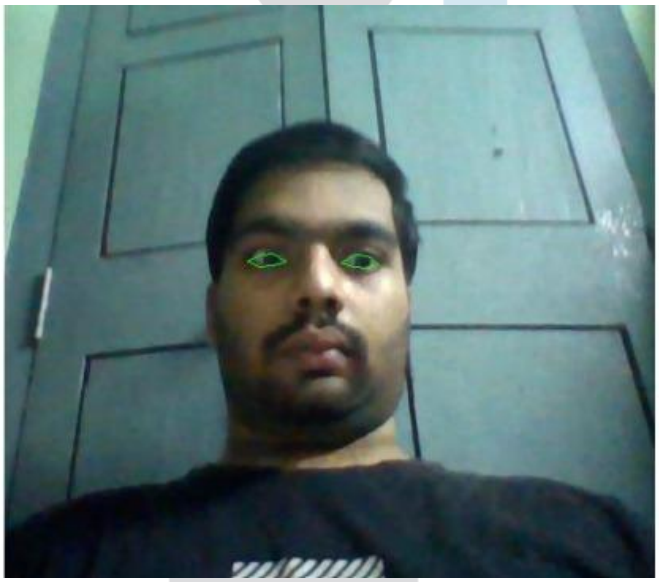

Screenshot of Eye coordinated of drowsiness detection display window.

Fig:-18

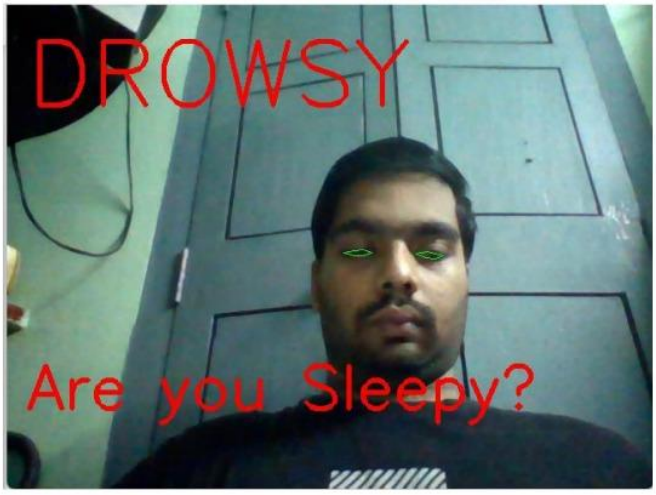

Screenshot of Eye drowsiness detection display window

Yawning Detection System:-

The output from in this yawning detection was divided into two categories: "Face landmark output" and "yawning detection output."

Face landmark output:

There are several obviously identifiable regions highlighted around the face in the output screenshot above. The forehead boundaries, eye region, mouth region, and nose region can all be differentiated when the face is detected using the detector and predictor functions of the dlib library since these regions are more dark than the rest of the face.

Fig-19

Screenshot of Facial landmarks display window.
All the discovered points are marked on the face in order to recognize the lip coordinates, which are necessary for drowsiness detection. If you look closely, you can see that they are also serially numbered, permitting the positions to also be distinguished by their coordinates.
Yawning Detector:-
Main detection concept:- The Euclidean distance between the upper and lower lips is the primary parameter considered for yawning detection. Subject is determined to be yawning when the gap is greater than a particular limit (often the distance between our mouths while speaking).

Fig-20

The parameter for "yawn count" is presented in the screenshot above, and its value is 10. A counter variable is generated when the programme originally commences, and it increases every time the subject yawns. The message "Subject is yawning is displayed" will be displayed if the mouth length is above the threshold, as in this screenshot; alternatively, hardly anything is displayed.

CONCLUSION

Although the disaster is not totally addressed, the losses from the accident can be averted by wearing seat belts. Road accidents are currently proven to be one of the important factor which affects of human resources. The man's life can be prevented extremely effectively by wearing his seat belt. The safety system for a car mentioned in this paper guarantees the driver through using three sensors and a Raspberry Pi. When this system is really put back into circulation, it will have a beneficial impact by decreasing the number of fatalities and accidents.

By using this technology, driving will be safer. So that the victim can find treatment quicker immediately, we can send a message with the accident's location to the closest medical facility in advance. It would be simple to save the victim sooner if this equipment were implemented in every vehicle.

REFERENCES

[1] T. Venkat Narayana Rao, Karttik Reddy Yellu. "Preventing Drunken Driving Accidents using IOT" International Journal of Advanced Research in ComputerScience, Volume 8, No. 3, March – April 2017

[2] Vaishnavi. M , Umadevi.V , Vinothini. M , Bhaskar Rao . Y , Pavithra. S "Intelligent Alcohol Detection System For Car" International Journal of Scientific & Engineering Research, Volume 5, Issue 11, November-2017.

[3] Supraja , Bhanu Sri, Mary Posonia "DRUNK AND DRIVE DETECTION USING IOT" International Journal of Pure and Applied Mathematics, Volume 118 No. 20 201

[4] Practical Animal Detection and collision avoidance system using Computer Vision Technique, 21 December 2016 publication, IEEE.

[5] Maliha Khan, Sudeshna Chakraborty, Rani Astya, Shaveta Khepra, "Face Detection and Recognition Using OpenCV", IEEE, October 2019

[6] World Health Organization, "Global Status Report on Road Safety 2015,"2015. [Online]. Available: Available:http://www.who.int/violence_injury_prevention/road_safety_status/ 2013/en/index.html. [Accessed: 29-May-2017].

[7] Taro Nakamura, Akinobu Maejima, Shigeo Morishima, "Driver Drowsiness Estimation from Facial Expression Features", International Conference on Computer Vision Theory and Applications, 2014.

[8] Zuopeng Zhao, Nana Zhou, Lan Zhang, Hualin Yan, Yi Xu Zhongxin Zhang, "Driver Fatigue Detection Based on Convolutional Neural Networks Using EM-CNN", Hindawi, November 2020.

(TO BE FILLED BY THE CORRESPONDING AUTHOR)

This document must be signed manually by corresponding author and submit **Only Scanned Copy** to editorial board.

I/We, the undersigned, give an undertaking to the following effect with regard to following mentioned article that submitted for publication in the International Journal for Research Trends and Innovation (IJRTI)

Paper Registration ID:	IJRTI184640

Research Paper Title:	DRIVER ALCOHOL AND DROWSINESS DETECTION SYSTEM

We warrant that

- The manuscript submitted is my/our own original work;
- All authors participated in the work in a substantive way and are prepared to take public responsibility for the work;
- I/we was authorized by all authors to transfer all royalties related with the manuscript and to enter into a binding contract with IJRTI as detailed in this Copyright Release Form, and I/we will be responsible in the event of all disputes that have occurred and that may occur,
- All authors have seen and approved the manuscript as submitted;
- E-mail and street addresses of all authors have been entered into the IJRTI Journals Manuscript Submission and Evaluation System correctly,
- The manuscript has not been published and is not being submitted or considered for publication elsewhere;
- The text, illustrations, and any other materials included in the manuscript do not infringe upon any existing copyright or other rights of anyone.
- I/we transfer all financial rights, especially processing, reproduction, representation, printing, distribution, and online transmittal, to IJRTI with no limitation whatsoever,
- If IJRTI found any copyright content or any issue related to copyright in future than IJRTI have rights to withdraw the paper without prior notice to authors.

Notwithstanding the above, the Contributor(s) or, if applicable the Contributor's Employer, retain(s) all proprietary rights other than copyright, such as

- Patent rights;
- To use, free of charge, all parts of this article for the author's future works in books, lectures, classroom teaching, or oral presentations;
- The right to reproduce the article for their own purposes provided the copies are not offered for sale.

Sr. No	Name of Author (in sequence)	Signature
1	NARAGAM KIRAN GANESH	KIRAN GANESH
2	NEERUKATTU MALYADRI NAIDU	MALYADRI NAIDU
3	GANGULA YASWANTH	YASWANTH
4	SAI SRINIDHI KAMARSU	SAI SRINIDHI
5	KARTHIKEYAN B	KARTHB

Date:_17/11/2022_____