ELIMINATION OF HARMONIC RESONANCE USING HYBRID ACTIVE FILTER UNIT WITH VARIABLE CONDUCTANCE

[1]Shaik Sajida Sultana, [2]Y Chintu Sagar

[1]M.Tech. Student, [2]Assistant Professor
Ashoka Womens Engineering College

***Abstract*: Harmonic distortion is mainly due to the tuned passive filter and line inductance which produces resonances in the industrial system. To suppress this above problem hybrid active filter is used. The proposed hybrid filter is operated as variable conductance according to the total harmonic distortion in voltage and current. Thus harmonic distortion can be reduced to an acceptable level in the power system. The hybrid active filter is a combination of seventh tuned passive filter and an active filter in series connection so that the VA rating of the active filter and the dc voltage of the active filter are reduced to acceptable levels and in addition to that hybrid active filter is used because of its filtering capability and the cost.**

***Keywords*: Harmonic resonance, Hybrid active filter, Industrial power systems.**

1. INTRODUCTION

The extensive usage of nonlinear loads such as adjustable speed drives, uninterruptable power supply and battery charging system increases the harmonic pollution. The diodes or rectifiers are used to realize the power conversion because of lower component cost and its simplicity. Moreover rectifiers allow a large amount of harmonic current flow in the system. This excessive power flow produces harmonic distortion which may give rise to malfunction of sensitive equipment. Normally tuned passive filter are located at the secondary side of the distribution transformer to provide low impedance for controlling harmonic current and to correct the power factor for harmonic loads[1],[2].To provide the parametric changes in the passive filters, results in unintended series or parallel resonances that may occur between the passive filter and the line inductance. The functionality of passive filter may become progressively worse and extra calibrating work is needed to maintain the filtering capability [3],[4].

Various active filtering technique have been presented to indicate the harmonic issues in the power system [5]-[7].The active filter is used for compensating harmonic currents of non-linear loads, but this may not be effective. To improve the performance of the passive filter "active inductance" hybrid filter was introduced [10].The fifth harmonic resonance is present between the power system and the capacitor bank. In order to suppress that fifth harmonic resonance a hybrid shunt active filter with filter –current detecting capability was used. The combination of both the active and the passive filter in series with the capacitor bank by coupling a transformer was used to reduce the harmonic resonance and to balance the harmonic current[12],[13].This method needs extra transformers or tuned passive filter to maintain the filtering capability

A transformer less hybrid active filter was presented to compensate harmonic current and or fundamental reactive current [14],[19].A hybrid active filter with damping conductance was proposed to suppress harmonic voltage propagation in distribution power systems [20].The resonance between the passive filter and the inductance is not considered in the system. The fixed conductance may deteriorate the damping performances. An anti-resonance hybrid filter for delta-connected capacitor bank of power-factor- correction applications is presented [21]. This in circuit was limited to three single-phase inverters, and the filtering performance was not considered. In addition, the hybrid active filter was proposed for the unified Power Quality (PQ) conditioner to address PQ issues in the power distribution system [22]. Several case studies of the hybrid active filter considering optimal voltage or current distortion were conducted in [23]. The hybrid filter is constructed by a seventh-tuned passive filter and an active filter in series connection. It operates as a variable conductance at harmonic frequencies according to the voltage THD, so that harmonic distortion can be reduced to an acceptable level in response to load change and power system variation. Since the series capacitor is responsible for sustaining the fundamental component of the grid voltage, the active filter is able to operate with a very low dc bus voltage, compared with the pure shunt active filter [14], [20]. Hence, both the rated kVA capacity and the switching ripples are reduced accordingly. Moreover, the proposed harmonic conductance is able to avoid over current of the passive filter in the case of mistuning parameters.

2. OPERATING PRINCIPLE

Fig 1(a) shows a simplified circuit diagram considered in this paper, where *Ls* represents the line inductance plus the leakage inductance of the transformer. The Hybrid Active Filter Unit (HAFU) is constructed by a seventh-tuned passive filter and a three-phase voltage source inverter connected in series connection. The passive filter is intended for compensating harmonic current and reactive power. The inverter is designed to suppress harmonic resonances and to improve the filtering performances of the passive filter.

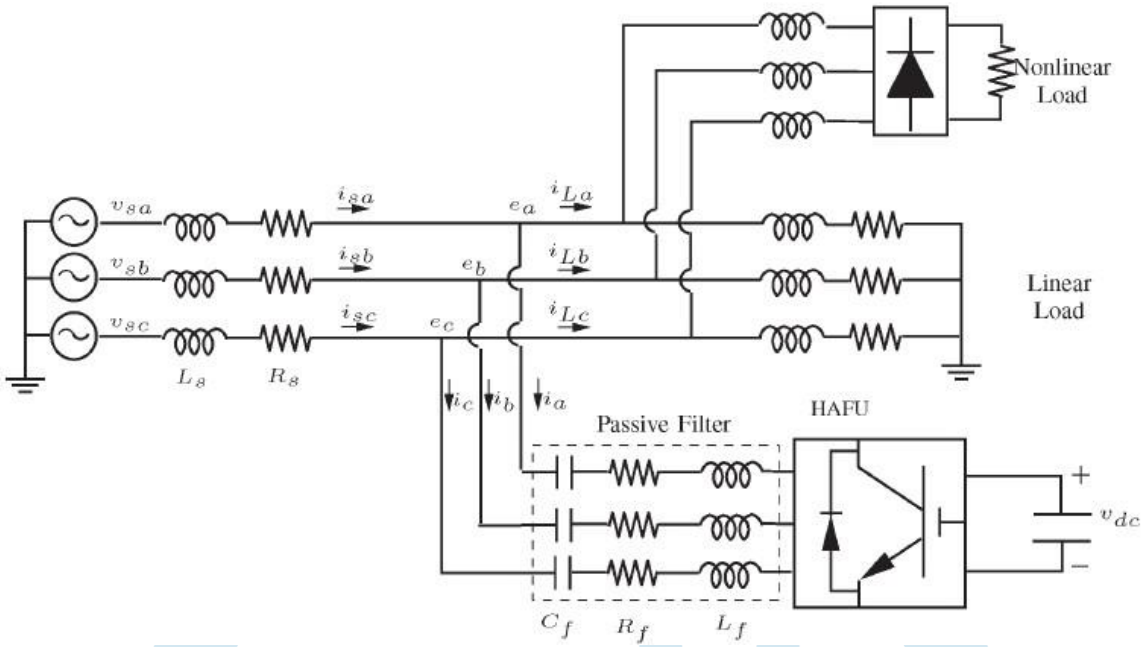

Fig 1(a): Proposed System

2.1 HARMONIC LOOP

To suppress harmonic resonances, the HAFU was proposed to operate as variable conductance at harmonic frequencies as follows

$$i^*_h = G^*.e_h \quad (1)$$

where i^*h represents the current harmonic command. The conductance command G^* is a variable gain to provide damping for all harmonic frequencies.

Harmonic voltage component e_h is obtained by using the SRF transformation [9], where a Phase-Locked Loop (PLL) is realized to determine the fundamental frequency of the power system [28]. In the SRF, the fundamental component becomes a dc value, and other harmonic components are still ac values. Therefore, harmonic voltage component $e^e_{qd,h}$ can be extracted from e^e_{qd} using high pass filters. After transferring back to a three-phase system, the harmonic current command i^*_h is obtained by multiplying e_h and the conductance command G^*, as shown in (1).

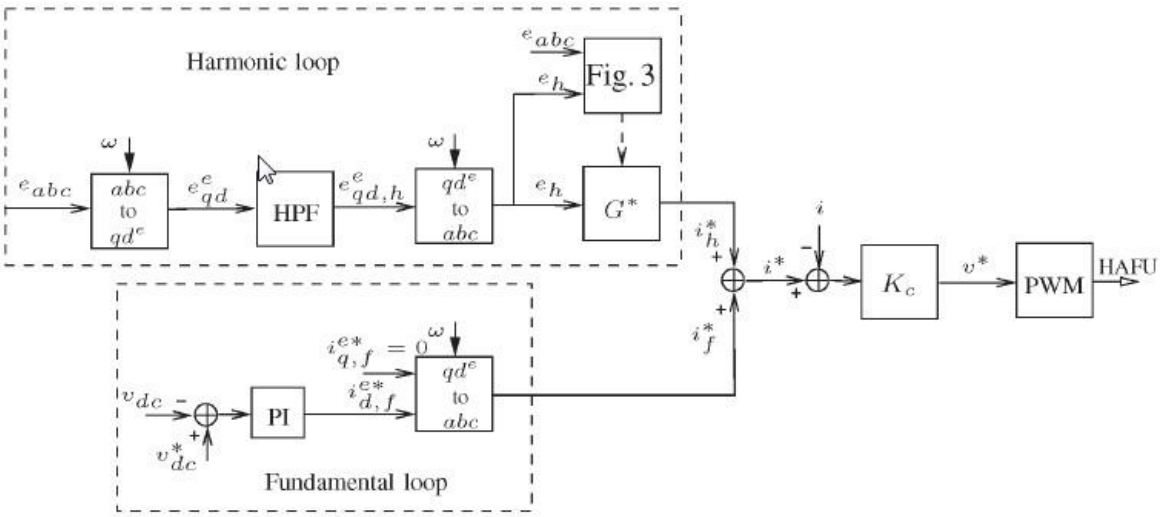

Fig 1(b): Control block diagram of the HAFU.

2.2 FUNDAMENTAL LOOP

In the paper, the *q*-axis is aligned to *a*-phase voltage. Since the passive filter is capacitive at the fundamental frequency, the passive filter draws leading current from the grid, which is located on the *d*-axis. The proposed inverter produces the low voltage on the *d*-axis, which is in phase with the leading current. Therefore, the control of dc bus voltage can be accomplished by exchanging real power with the grid.

Thus, the current command $i^{e*}_{d,f}$ is obtained by a proportional–integral (PI) controller. The fundamental current command i^*_f in the three-phase system is generated by applying the inverse SRF transformation. The harmonic voltage drop on the passive filter due to the compensating current of the HAFU [20], where *I* represents the maximum harmonic current of the active filter, and the voltage drop on filter resistance R_f can be neglected.

$$v_{dc} > 2\sqrt{2}\sum_{h}\left|\frac{1}{j\omega_h C_f} + j\omega_h L_f\right| \cdot I_h.$$

As can be seen, a large filter capacitor results in the reduction of the required dc voltage. The filter capacitor determines reactive power compensation of the passive filter at the fundamental frequency. Thus, the dc voltage v^*_{dc} can be determined based on this compromise. Note that the compensating current should be limited to ensure that the hybrid filter operates without undergoing saturation, i.e.,

2.3 CURRENT REGULATOR

The current command i^*consist of i^*h and i*f Based on the current command $i^*$and the measured current i, the voltage command v^*can be derived by using a proportional controller as follows:

$$v^*=K_C.(I^*-i) \qquad (3)$$

Where K_c is a proportional gain. According to the voltage command v^*, space vector pulse width modulation (PWM) is employed to synthesize the required output voltage of the inverter.The computational delay of digital signal processing is equal to one sampling delay T, and PWM delay approximates to half the sampling delay $T/2$. Hence, the proportional gain K_c can be simply evaluated from both open loop and closed-loop gains for suitable stability margin and current tracking capability.

2.4 CONDUCTANCE CONTROL

Fig 2 shows the proposed conductance control. The harmonic conductance command $G*$ is determined according to the voltage THD at the HAFU installation point. The voltage THD is approximately calculated by the control shown in Fig. 3. Here, two low-pass filters (LPFs) with cutoff frequency f_{LP} = 20 Hz are realized to filter out ripple components [29], [30].

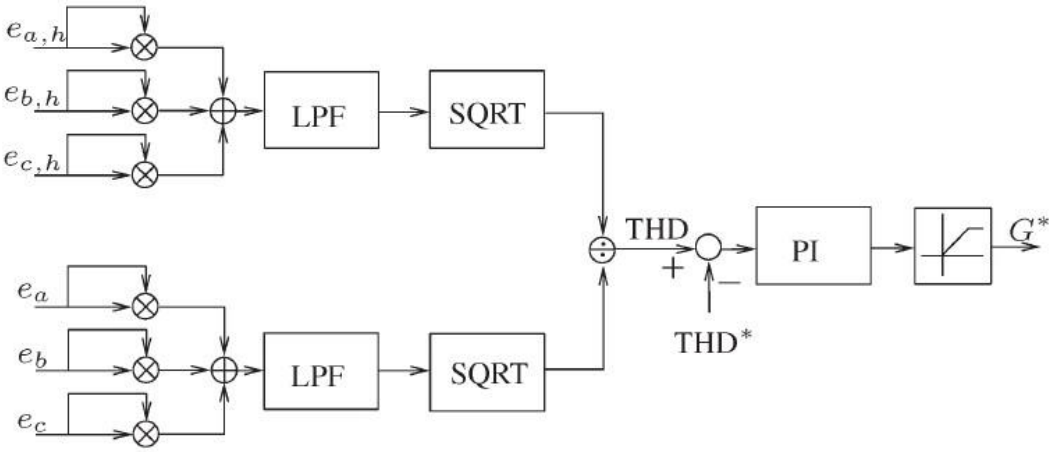

Fig 1(c): Conductance control block diagram.

The error between the allowable THD* and the measured THD is then fed into a PI controller to obtain the harmonic conductance command G^*.Note that PI parameters need to be tuned fo required response and stability. For example, the proportional gain can be tuned for transient behavior, and the integral gain is responsible for suppressing the steady-state error.

The bandwidth should be lower than one-tenth of the cutoff frequency of the current loop to assure stable operation. This way, the HAFU is able to dynamically adjust G^* to maintain harmonic distortion at an allowable level.

3 EXPERIMENTAL VERIFICATION

The filtering performance of HAFU designed by using equivalent circuit models. The passive filter equivalent harmonics has been changed by harmonic conductance so that the unintentional resonances can be avoided. Here the major concentration is on THD*. To compensate the inductive loads a capacitor has been used. A filter inductor was chosen to balance the LC filter resonant. The three phase of the inverter is short circuited so that OFF state HAFU corresponds to turning on three upper switches and turning off of three lower switches. At this moment, HAFU acts as a pure passive filter.

3.1 THREE PHASE LOAD

In the case of three phase load system, the filter is designed using pq theory. When HAFU Is in OFF state HAFU becomes a passive filter.

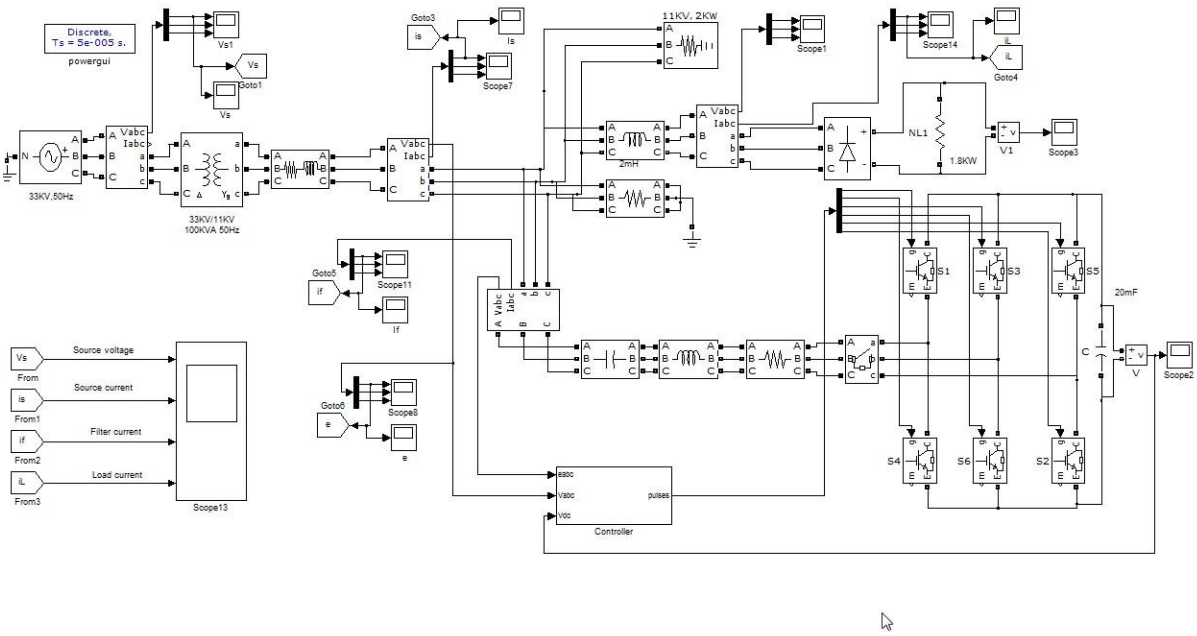

Fig 3(a) Simulation circuit without HAFU for 3-phase load.

The simulation was done for the linear loads and the non linear loads and when the HAFU is off the harmonics caused by both loads are very high. In fig 4 shows the disturbances produced in the sinusoidal waveform which is due to the harmonic disturbance.
As can be seen, the passive filter loses its filtering functionality and even causes excessive harmonic current in *is* or harmonic voltage on *e*. It is worth noting that the resonant frequency could be shifted toward the lower frequency due to the existence of the leakage inductance of the transformer.

High-order harmonics (>13) are not included here due to insignificance. Seventh harmonic voltage distortion is increased after the HAFU is started. This is because the HAFU emulates conductance for all harmonic frequencies. This feature can be used to avoid the overloading of the passive filter at the tuned (seventh) frequency. We also observe that fifth harmonic component of load current i_L is slightly increased. This may result from improvement of the fifth voltage distortion on *e*.

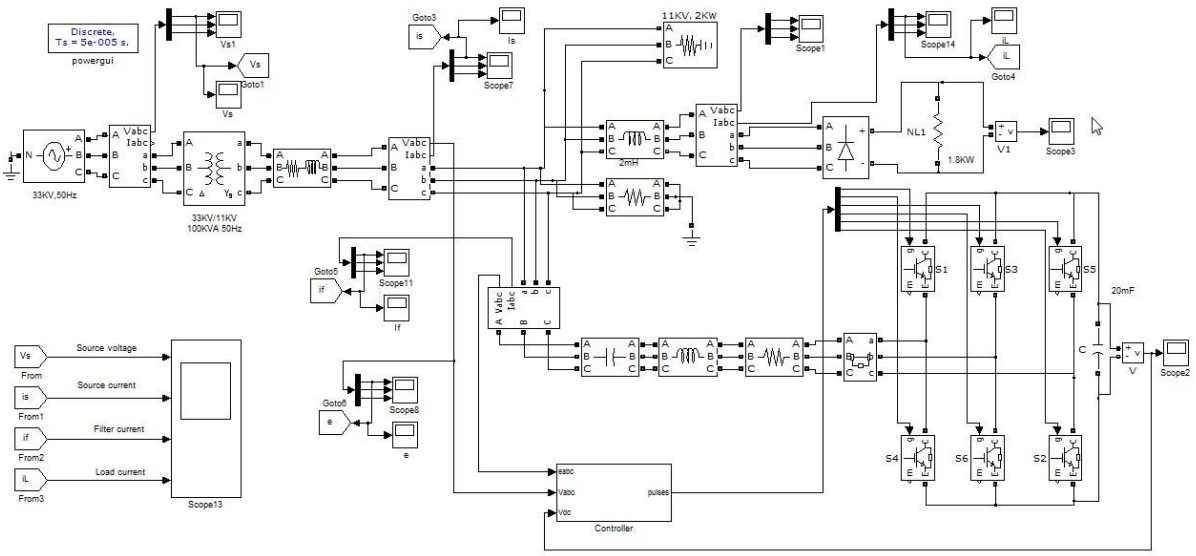

Fig 3(b) Simulation circuit with HAFU

DETERMINATION OF THD*

According to IEEE std. 519-1992 [31], voltage THD is limited to 5%, and individual distortion should be below 4%. Thus, THD* is set in the range of 3% and 5%. If $v_{s,h}$ and R_s are neglected, voltage THD at E, due to harmonic current load I_h, can be expressed as follows:

$$\mathrm{THD} = X_{\mathrm{pu}}\sqrt{\sum_{h}(h \cdot I_{h,\mathrm{pu}})^2}. \qquad (4)$$

X represents the series impedance of both L_s and leakage inductance of transformer. Here, we will consider three cases in Table I to illustrate how to determine voltage THD* where only the fifth and seventh harmonics are considered.

3.2 SINGLE PHASE LOAD

In addition, filtering experiment considering single-phase nonlinear load is conducted. The setup of three-phase diode rectifier is changed to a single phase one by adding a smooth dc capacitor of 560 μF. Since the nonlinear load is connected between a-phase and b-phase, large third-order harmonic current is generated between them.

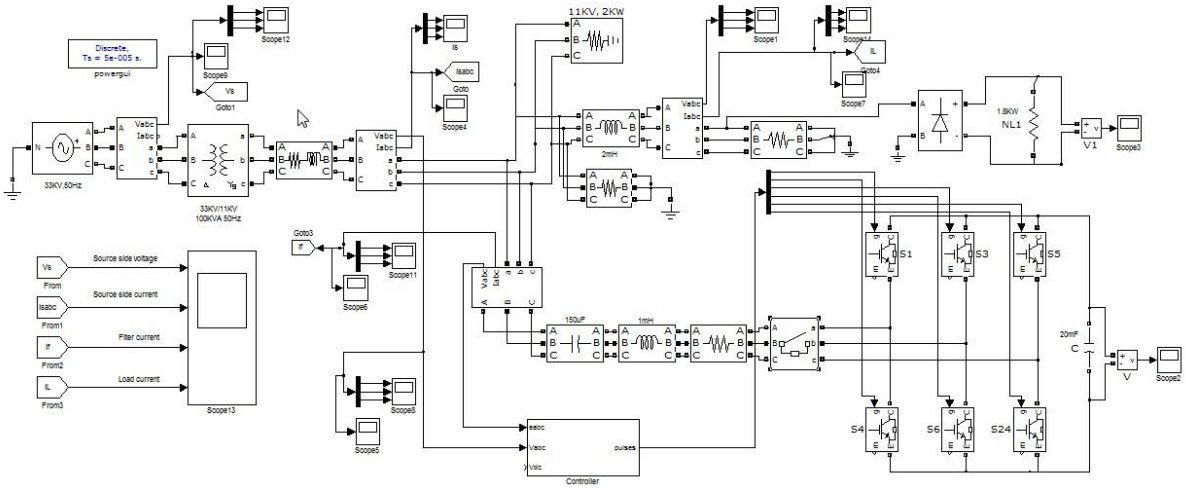

Fig 4(a) Simulation circuit without HAFU for 1-phase load.

As shown in Fig. 13, harmonic current is amplified between the source current *is* and the filter current *i*. After the HAFU is started, harmonic resonance is suppressed, and current distortion is reduced as indicated in Fig. 14.

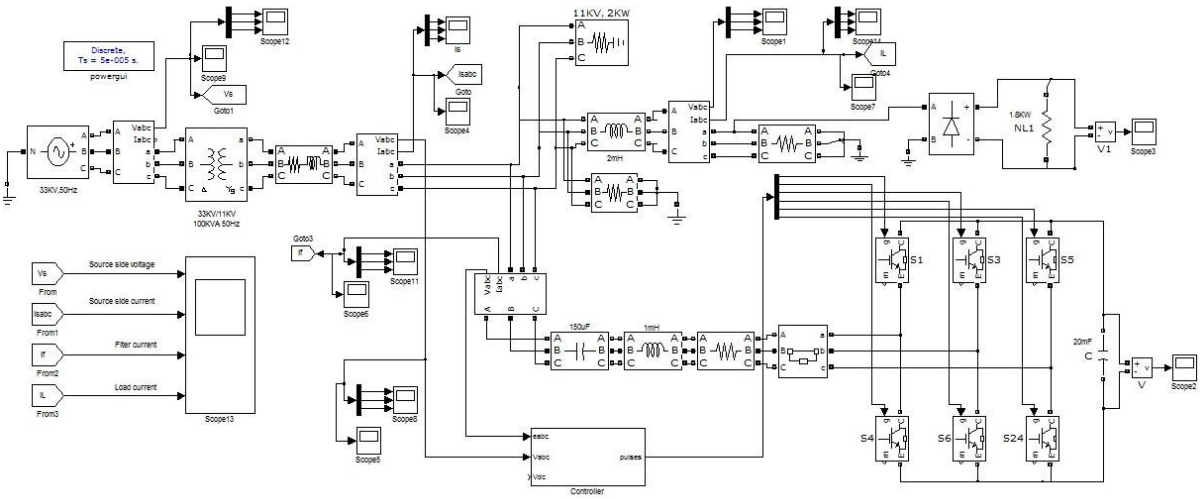

Fig 4(b) Simulation circuit with HAFU for 1-phase load.

4 SIMULATION RESULTS

1. HAFU OFF FOR THREE PHASE LOAD

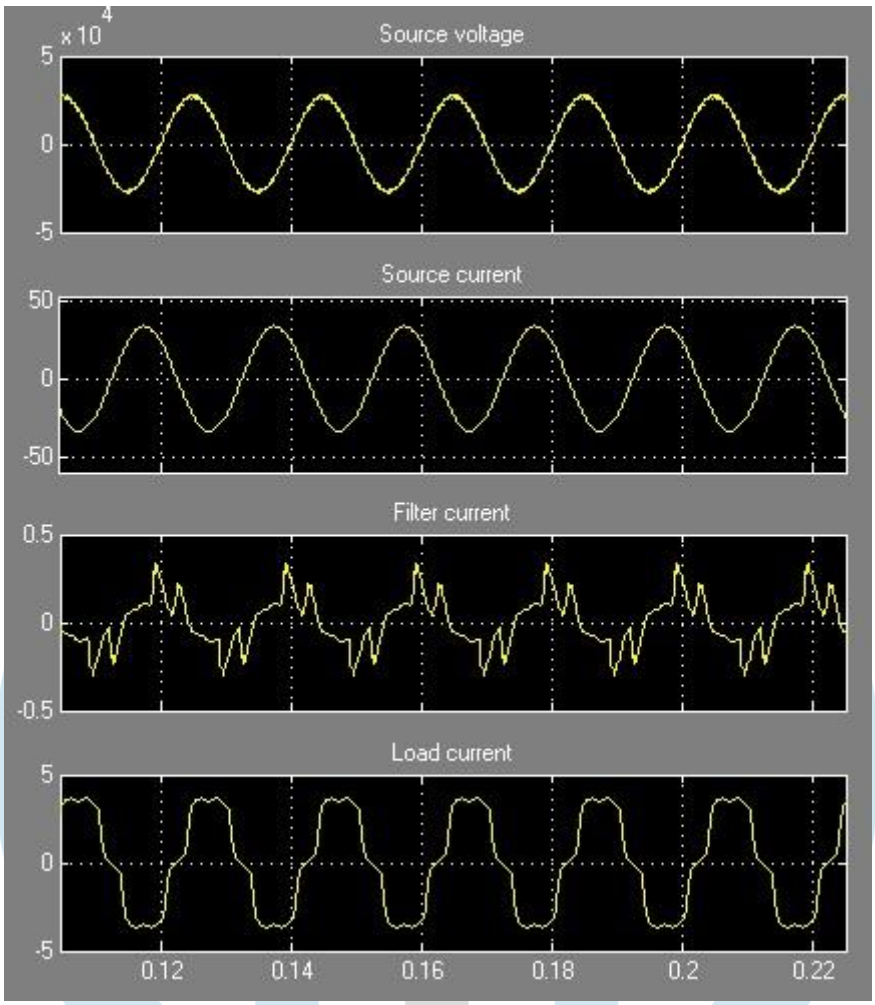

Fig 5(a) source voltage , source current i_s, load current i_L, and filter current i when HAFU is off

FFT ANALYSIS

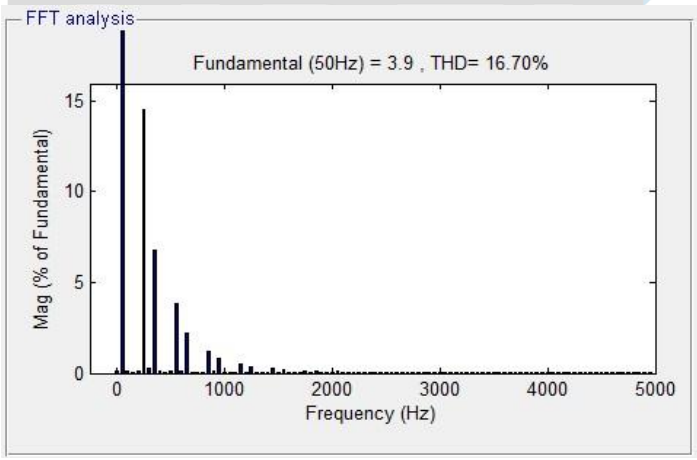

Fig 5(b) FFT analysis of load current

2. HAFU ON FOR THREE PHASE LOAD

3.

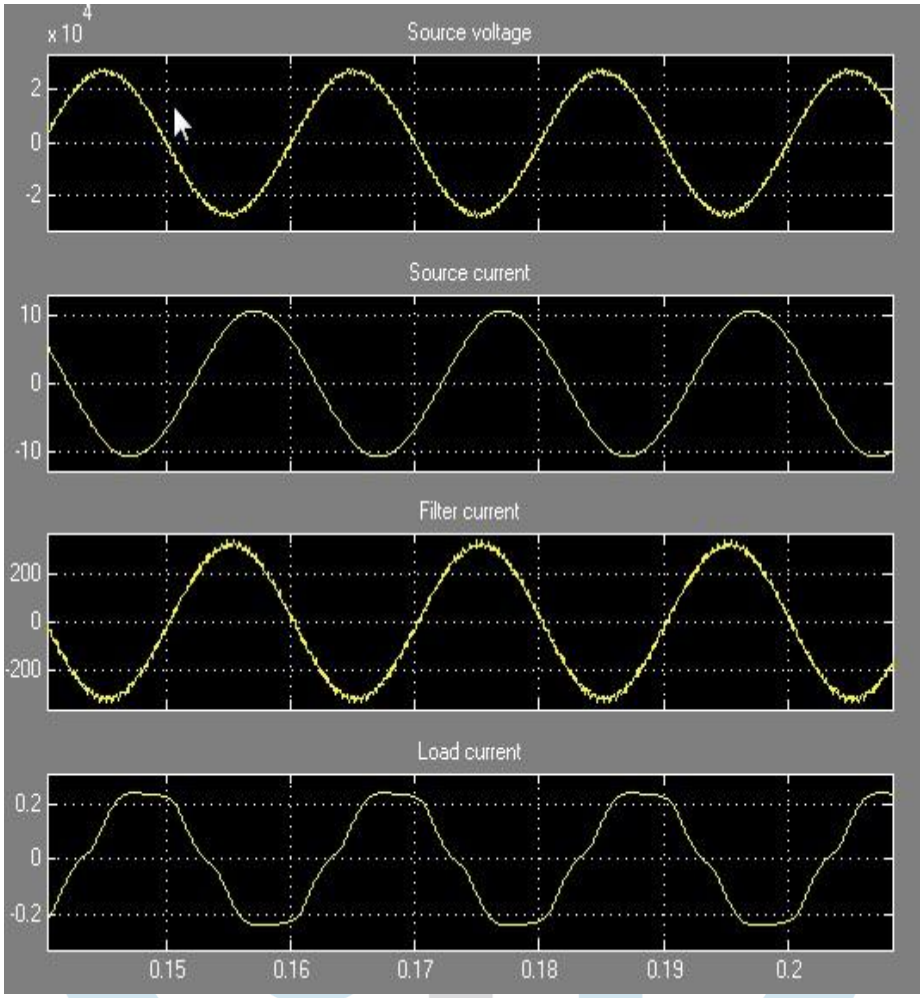

Fig 6(a) source voltage , source current i_s, load current i_L, and filter current i when HAFU on

FFT ANALYSIS

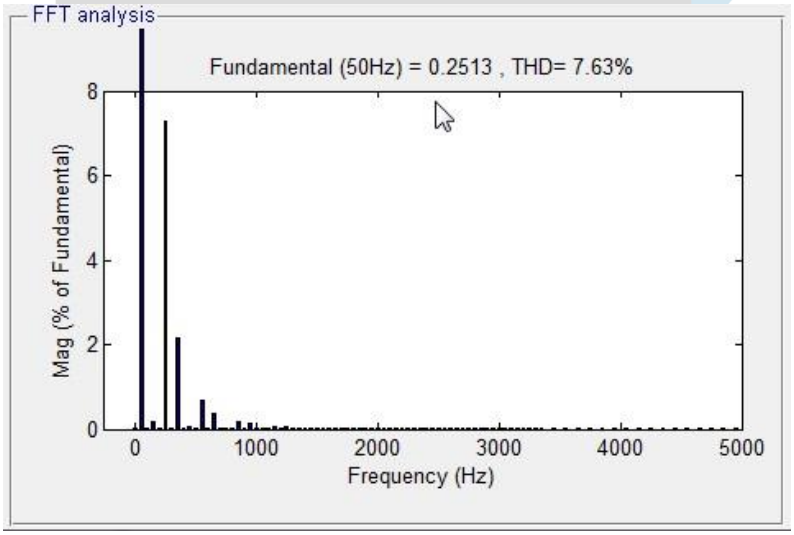

Fig 6(b) FFT analysis of load current

4. HAFU OFF FOR SINGLE PHASE LOAD

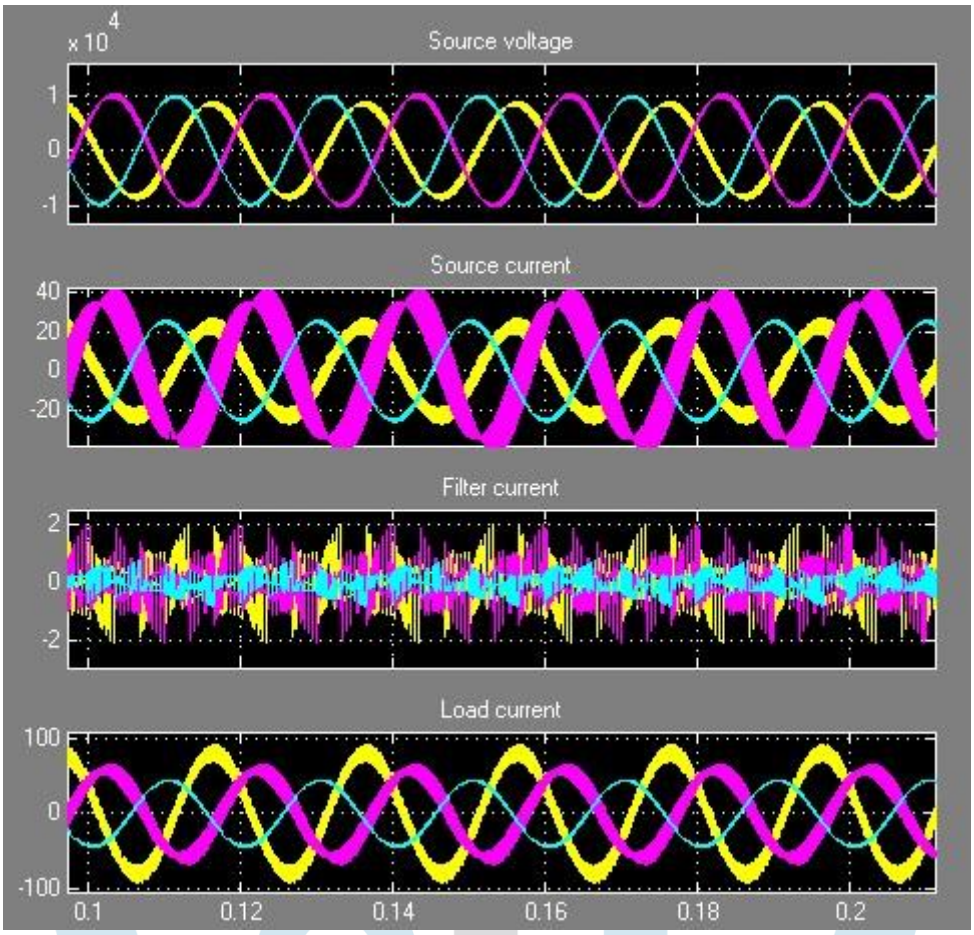

Fig 5(a) source voltage , source current i_s, load current i_L, and filter current i when HAFU is off

FFT ANALYSIS

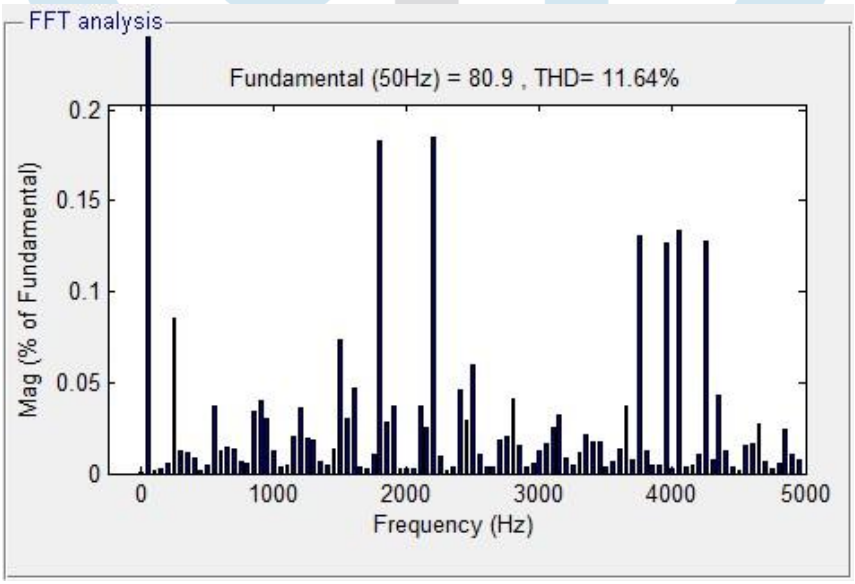

Fig 5(b) FFT analysis of load current

5. HAFU ON FOR SINGLE PHASE LOAD

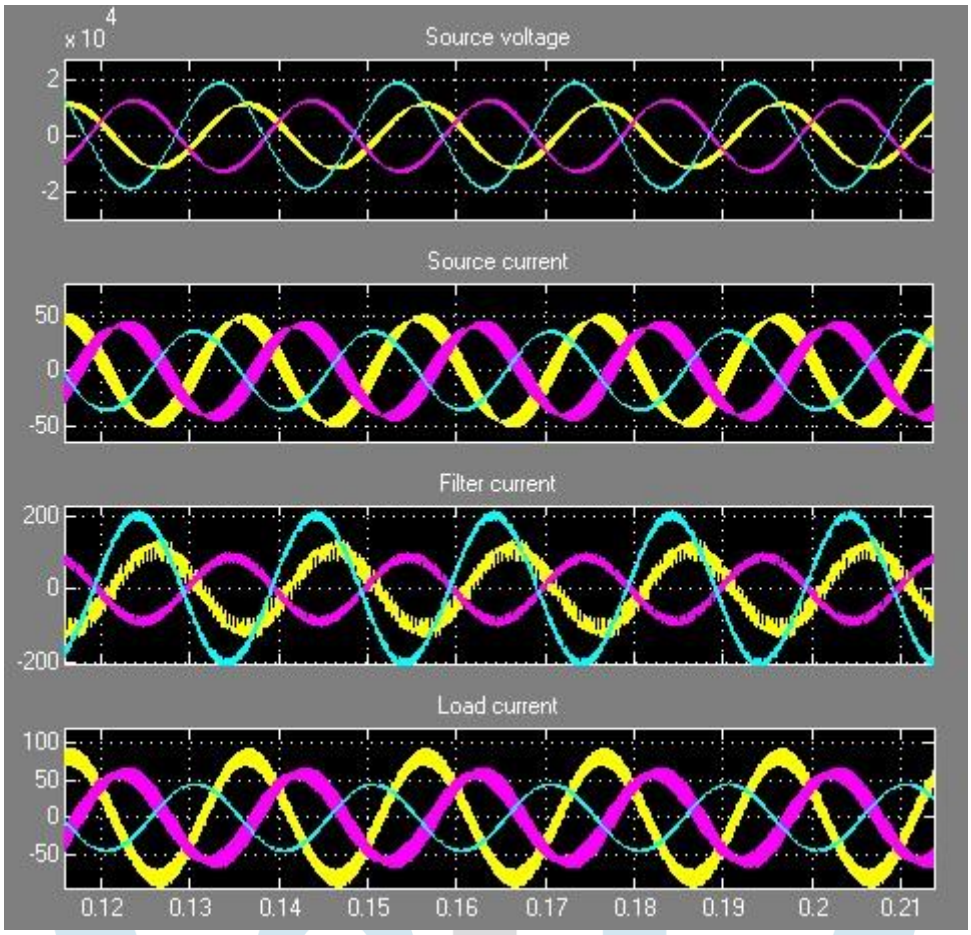

Fig 6(a) source voltage , source current i_s, load current i_L, and filter current i when HAFU on

FFT ANALYSIS

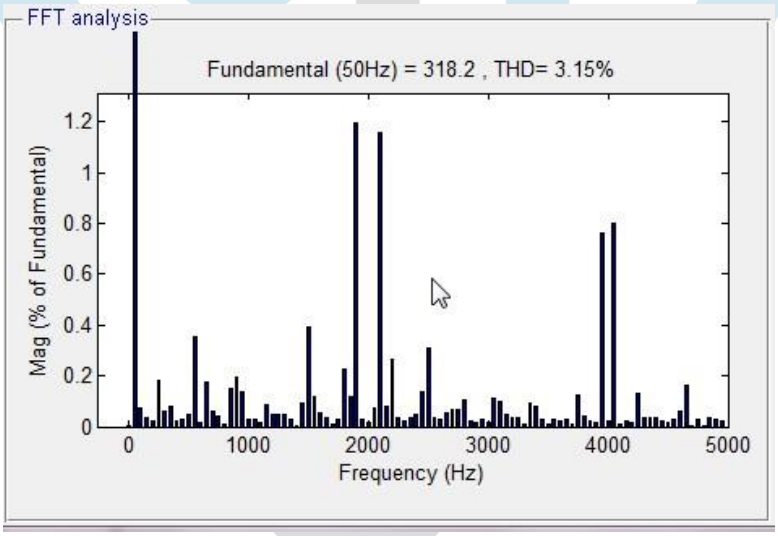

Fig 6(b) FFT analysis of filter current

5 CONCLUSION

In this paper the role of Hybrid Active Filter unit to suppress the harmonic distortion is discussed.The hybrid active filter is composed of the seventh harmonic tuned passive filter and an active filter in series connection.With the active filter operating as variable harmonic conductance, the filtering performances of the passive filter can be significantly improved. Accordingly, the harmonic resonances can be avoided, and the harmonic distortion can be maintained inside an acceptable level in case of load changes and variations of line impedance of the power system.

REFERENCES

[1] R. H. Simpson, "Misapplication of power capacitors in distribution network with nonlinear loads-three case histories," *IEEE Trans. Ind. Appl.*,vol. 41, no. 1, pp. 134–143, Jan./Feb. 2005.

[2] T. Denise and V. Lorch, "Voltage distortion on an electrical distribution system," *IEEE Ind. Appl. Mag.*, vol. 16, no. 2, pp. 48–55, Mar./Apr. 2010.

[3] E. J. Currence, J. E. Plizga, and H. N. Nelson, "Harmonic resonance at a medium-sized industrial plant," *IEEE Trans. Ind. Appl.*, vol. 31, no. 4, pp. 682– 690, Jul/Aug. 1995.

[4] C.-J. Wu *et al.*, "Investigation and mitigation of harmonic amplification problems caused by single-tuned filters," *IEEE Trans. Power Del.*, vol. 13, no. 3, pp. 800–806, Jul. 1998.

[5] B. Singh, K. Al-Haddad, and A. Chandra, "A review of active filters for power quality improvement," *IEEE Trans. Ind. Electron.*, vol. 46, no. 5,pp. 960–971, Oct. 1999.

[6] H. Akagi, "Active harmonic filters," *Proc. IEEE*, vol. 93, no. 12, pp. 2128– 2141, Dec. 2005.

[7] A. Bhattacharya, C. Chakraborty, and S. Bhattacharya, "Shunt compensation,"*IEEE Ind. Electron. Mag.*, vol. 3, no. 3, pp. 38–49, Sep. 2009.[8] F. Z. Peng, "Application issues of active power filters," *IEEE Ind. Appl. Mag.*, vol. 4, no. 5, pp. 21–30, Sep./Oct. 2001.

[9] S. Bhattacharya and D. Divan, "Design and implementation of a Hybrid series active filter system," in *Proc. 26th IEEE PESC*, 1995, pp. 189–1995.

[10] S. Bhattacharya, P.-T. Cheng, and D. Divan, "Hybrid solutions for improving passive filter performance in high power applications," *IEEE Trans. Ind. Appl.*, vol. 33, no. 3, pp. 732–747, May/Jun. 1997.

[11] H. Fujita, T. Yamasaki, and H. Akagi, "A hybrid active filter for damping of harmonic resonance in industrial power systems," *IEEE Trans. Power Electron.*, vol. 15, no. 2, pp. 215–222, Mar. 2000.

[12] D. Detjen, J. Jacobs, R. W. De Doncker, and H.-G. Mall, "A new hybrid filter to dampen resonances and compensation harmonic currents in industrial power systems with power factor correction equipment," *IEEE Trans. Power Electron.*, vol. 16, no. 6, pp. 821–827, Nov. 2001.

[13] V. Verma and B. Singh, "Design and implementation of a current controlled parallel hybrid power filter," *IEEE Trans. Ind. Appl.*, vol. 45, no. 5, pp. 1910–1917, Sep./Oct. 2009.

[14] H. Akagi, S. Srianthumrong, and Y. Tamai, "Comparison in circuit configuration and filtering performance between hybrid and pure shunt active filters," in *Conf. Rec. 38th IEEE IAS Annu. Meeting*, 2003, pp. 1195–1202.

[15] C.-S. Lam, W.-H. Choi, M.-C. Wong, and Y.-D. Han, "Adaptive DC-link voltage-controlled hybrid active power filters for reactive power compensation," *IEEE Trans. Power Electron.*, vol. 27, no. 4, pp. 1758–1772, Apr. 2012.

[16] A. Bhattacharya, C. Chakraborty, and S. Bhattacharya, "Parallel connected shunt hybrid active power filters operating at different switching frequencies for improved performance," *IEEE Trans. Ind. Electron.*, vol. 59, no. 11, pp. 4007–4019, Nov. 2012.

[17] S. Rahmani, K. Hamadi, and A. Al-Haddad, "A Lyapunov-function-based control for a three-phase shunt hybrid active filter," *IEEE Trans. Ind. Electron.*, vol. 59, no. 3, pp. 1418–1429, Mar. 2012.

[18] S. Rahmani, A. Hamadi, K. Al-Haddad, and L. Dessaint, "A combination of shunt hybrid power filter and thyristor-controlled reactor for power quality," *IEEE Trans. Ind. Electron.*, vol. 61, no. 5, pp. 2152–2164,May 2014.

[19] C.-S. Lam *et al.*, "Design and performance of an adaptive low-DCvoltage- controlled LC-hybrid active power filter with a neutral inductor in three-phase four-wire power systems," *IEEE Trans. Ind. Electron.*, vol. 61, no. 6, pp. 2635–2647, Jun. 2014.

[20] R. Inzunza and H. Akagi, "A 6.6-kV transformerless shunt hybrid active filter for installation on a power distribution system," *IEEE Trans. Power Electron.*, vol. 20, no. 4, pp. 893–900, Jul. 2005.

[21] P. Jintakosonwit, S. Srianthumrong, and P. Jintagosonwit, "Implementation and performance of an anti-resonance hybrid delta-connected capacitor bank for power factor correction," *IEEE Trans. Power Electron.*, vol. 22, no. 6, pp. 2543–2551, Nov. 2007.

[22] K. Karanki, G. Geddada, M. Mishra, and B. Kumar, "A modified three phase UPQC topology with reduced DC-link voltage rating," *IEEE Trans. Ind. Electron.*, vol. 60, no. 9, pp. 3555–3566, Sep. 2013.

[23] A. Zobaa, "Optimal multiobjective design of hybrid active power filters considering a distorted environment," *IEEE Trans. Ind. Electron.*, vol. 61, no. 1, pp. 107–114, Jan. 2014.

[24] T.-L. Lee, Y.-C. Wang, and J.-C. Li, "Design of a hybrid active filter for harmonics suppression in industrial facilities," in *Proc. IEEE PEDS*, 2009, pp. 121– 126.

[25] T.-L. Lee, Y.-C. Wang, and J. Guerrero, "Resonant current regulation for a transformerless hybrid active filter to suppress harmonic resonances in industrial power systems," in *Proc. IEEE APEC Expo.*, 2010, pp. 380–386.