An Automated IOT Enabled Sprinkler Irrigation System

[1]Rajitha A A, [2]Ajith Kumar B P
[1]Assistant Professor, [2]Assistant Professor
[1]Department of Electronics and communication Engineering
Canara Engineering College, Mangalore, India

Abstract-The farmers in rural villages have limited access to the power. The power from the local grid is supplied to irrigation pump sets only for limited duration, this will burden the farmers to keep themselves awake and wait for the power supply so that they can turn their pump sets ON/OFF. Most of the times the plants are over watered, and the effective utilization water resource is impossible. The proposed system will enable the farmers turn the system ON/OFF on their fingertips sitting at a remote location without even coming out of their house. The farmer will receive the notification on his phone, when the power is sensed by the current sensors placed in the system keeping farmers in relaxed mode. The app installed in the farmers mobile phone is responsible to receive the input from farmer and send it to system located far away in the farm connected to NodeMcu through internet protocol. The control signals from the NodeMcu will energise the relays placed in the system to bypass the manual switches placed in the DOL starter which is responsible to turn 3 phase pumps ON/OFF. The proposed system will reduce the required efforts and time of the farmer, it also increases the production of crops with minimal usage of underground water.

Keywords— DOL starter, IOT, Blink App, Irrigation

I. INTRODUCTION (HEADING 1)

Internet is available across the country even in the rural places, the application of internet is very rare in the field of agriculture. The internet has the vast capacity to ease the life of farmers in rural India there by increasing the production and reduction in manpower as well which will directly help in increasing revenue of the farmers, in this regard proposed system will ease the efforts of farmers in irrigation of their farms with minimal attention.

In the proposed system we are implementing the system on IOT platform, which will enable us to have the complete control of the farm and the equipment's in both audio as well as visual. One can have complete control of the situation in the farm through internet mechanisms Automation of farm activities can transform agricultural domain from being manual and static to intelligent and dynamic leading to higher production with lesser human supervision. IOT is used to keep the farmers updated about the status of sprinklers.

GSM based farm monitoring system designed to monitor and maintain the irrigation as well as fertigation of farm this system was designed to operate on a single-phase motor pump the system has sensors to monitor the NPK levels as well as the moisture sensor based on the sensor values the fertigation was controlled so that effective fertigation was carried. The GSM based mobile phone was used to turn the system on and off, the major drawback we faced is in monitoring the operational status of irrigation mechanism as well as the power failure related issues.

II. LITERATURE REVIEW

An irrigation system using microcontroller and sensor network based on fuzzy PID control is used where the data are collected from the sensor and microcontroller processes it and takes respective actions[1] Based on the moisture content the drip irrigation system is turned on and off using the moisture sensor connected to arm processor[2] the controlled irrigation is carried out by installing a solenoid valve to each of the plants in green house.[3] The pivot irrigation system consisting of sprinklers placed on structure above the ground level with different partition of pipe that sprays the water jet in 360 degrees[4] deficit irrigation system was used in order to get the sustainable irrigation[5].

III. PROPOSED SOLUTION

The proposed project consists of IOT based cloud platform which will control the devices remotely using the internet protocol. The NodeMCU which consists of ESP8266 is responsible to communicate with the application installed in the mobile phone through which the user can monitor and control devices and irrigation mechanism.

The 3 phase motors are controlled by the DOL starter which is energised by the relay connected to NodeMCU. By turning relay ON/OFF farmer can control the operation of motor. The APP installed on the mobile phone of the farmer will have the led indications to monitor the availability of power in the farm and the user switch will provided on the APP to turn ON /OFF the motor. The power is monitored by the hall effect sensors placed inside the DOL which identifies the variation magnetic Flux

To control the start and stop of the motor, NodeMCU is connected to two relays. Motor current was detected using a WCS1700 current sensor. The output of the sensor determines whether the motor is ON or OFF. We can also know the grid status at any time by sensing power availability from the grid and publishing it to the broker. Two feeds are subscribed to by the device so that it can receive requests for motor ON and motor OFF. We can control the motor to start or stop by sending specific values to these feeds

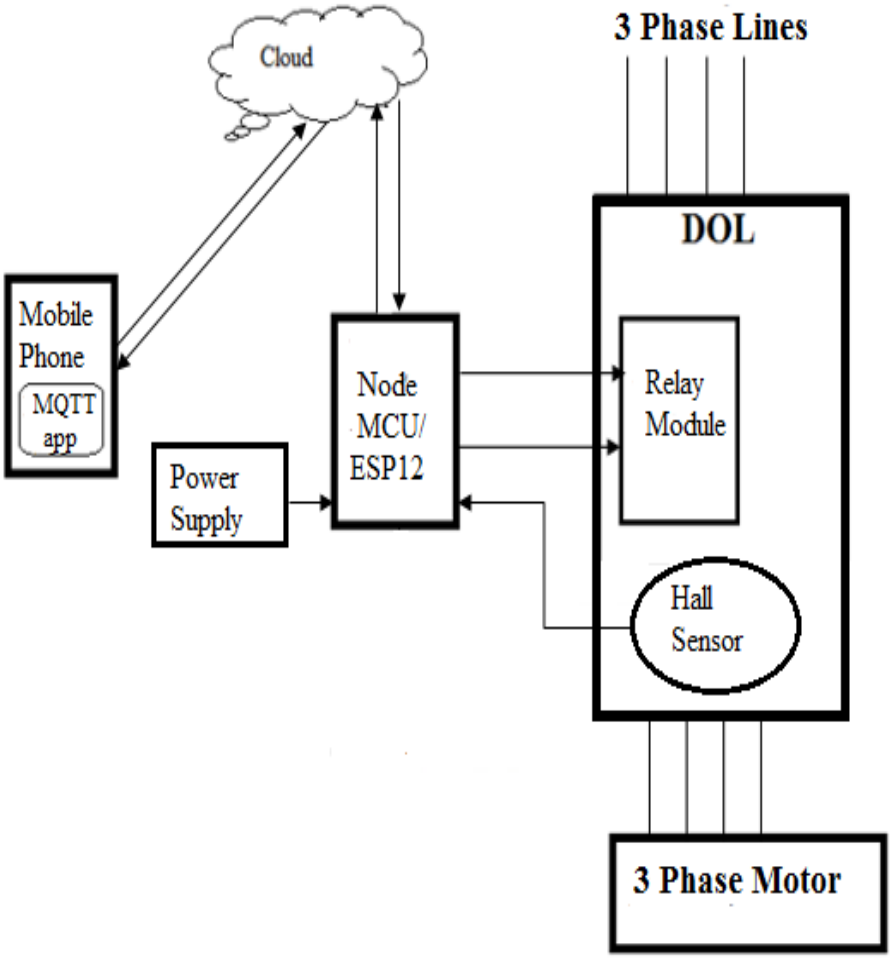

Figure1: Block diagram of IOT based Motor controll unit

Power supply: To power NodeMCU, TP4056 charges the batteries and LM313 regulates the 3.7V - 4.2V of battery output to 3.3V. to sense the grid power supply voltage, a 5k ohm voltage divider is used. The voltage divider reduces 5 V to 2.5 V. Pin D5 of the NodeMCU will be used to sense the voltage.

WCS1700: As the current flows through the coil, the WCS1700 produces an output voltage proportional to the magnetic field created. A coil here serves as a power supply line to power the motor. It is capable of measuring AC current up to 70 amps. WCS1700 operates between 3.3 and 12 volts. Analog voltages are read from the sensor by connecting the output pin to A0. It is necessary to pass the Grid Power line through the hole to measure the current flowing through it.

DOL starter: The relays controlled by node MCU is connected to DOL starter DOL starter traditional manual starts consisting of START and STOP switch. This change will not affect the manual start/stop operation and they continue to work as is. 2 channel 5 V relay module as START and STOP switch. These relays will be controlled by ESP8266.

Relay – 0 will work as START switch
Relay-1 will work as STOP switch

MCU/ESP12: The Entire controlling of the above-mentioned devices are carried out by the microcontroller NodeMCU which is typically used for IOT based communication because of inbuilt internet module ESP12 is responsible for the communicating the device to the MQTT gateway

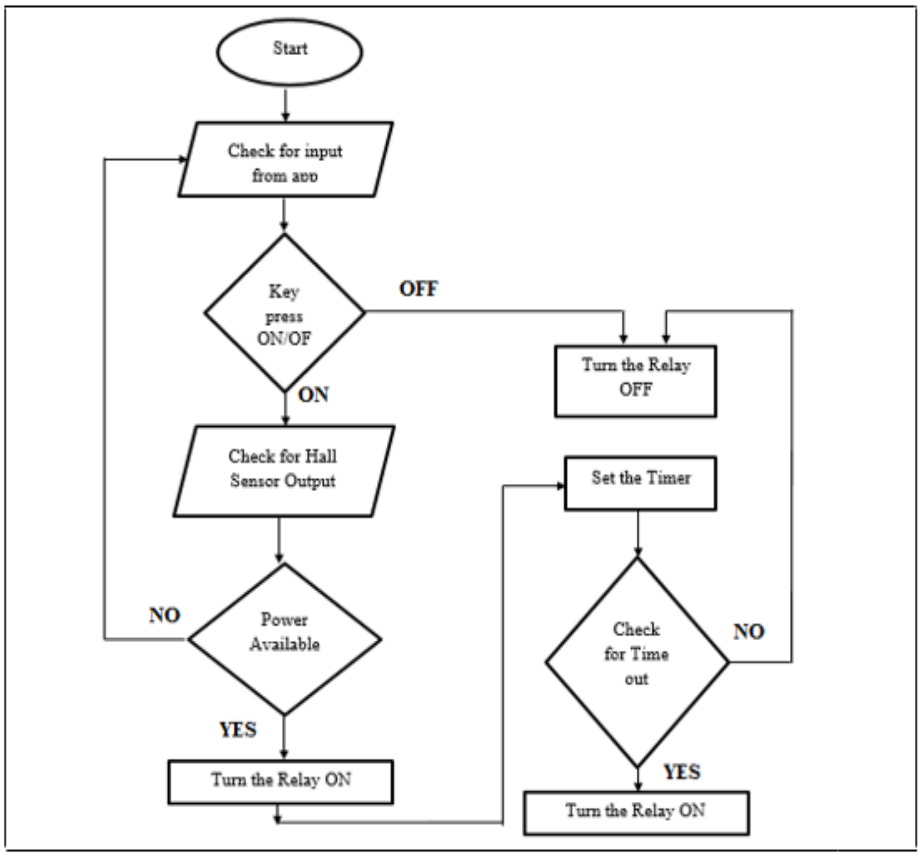

Figure 2. Flow chart of the process

IV. Benefits

A. Social Benefits

In the 2002-03 round of the survey, about 69.6 per cent of the agricultural households possessed less than 1 hectare of land, which increased to 76.5 per cent by 2018-19. These marginal farmers now own about 34.5 per cent of the land as opposed to 23 per cent in 2002-03. The proposed project will positively ease the efforts of 34.5% of farmers. And help in uplifting of social standards of farmers.

B. Economical Benefits

Agricultural households possessing less than 0.01 hectare of land had a monthly income of Rs 11,777, of which only Rs 3,744 (or 32 per cent) came from farming and 55 per cent came from wages. Similarly, households with 0.01 to 0.4 hectares of land earned 26 per cent of their livelihood from farming. Those with 0.41 to 1 hectare of land earned only 44 per cent of their monthly incomes from farming. The proposed system will help the farmers to reduce expenses incurred which indirectly increases the revenue of the farmer

V. CONCLUTIONS

The proposed project is expected ease the difficulties faced by the farmer in manually controlling the 3-phase motor pump. The APP installed on the Phone helps farmer to turn the motor ON/OFF. The values obtained through Hall sensor enables the system to switch the sprinkler on and off. A farmer can remotely monitor the irrigation process on the farm. This will help farmer to achieve better yield as well as better revenue.

References

[1] Yu Han, Guangda Lu, Tinghang Guo, Tongtong Qie, Qiuyue Zhang "Design of Agriculture Intelligent Irrigation System based on Wireless Sensor Network" 2020 Chinese Automation Congress (CAC) 06-08 November 2020

[2] Kavianand G, Nivas V M, Kiruthika R, Lalitha S 'Smart Drip Irrigation System for sustainable Agriculture" 2016 IEEE International Conference on Technological Innovations in ICT For Agriculture and Rural Development (TIAR 2016) 15-16 July 2016 **ISBN:**978-1-5090-0616-8

[3] Chili Karlisa Priandana, d Ramadina Al-Fatihah Wahyu "Development of Automatic Plant Irrigation System using Soil Moisture Sensors for Precision Agriculture" 2020 International Conference on Smart Technology and Applications (ICoSTA) 978-1-7281-3083-5/20/$31.00 ©2020 IEEE 10.1109/ICoSTA48221.2020.1570615896

[4] Shilps A, Muneeshwaran .V, Devi Kala Rathinam "A pricise and autonomous irrigation system for Agriculture: IOT based self-Propelled center Pivot Irrigation System 2019", 5th international conference on Advanced computing and communication systems(ICACCS)15-16 March 2019

[5] Luís Pádua Thyago Brito Joaquim J. Sousa1, and Anabela Fernandes "Monitoring of olive trees temperatures under different irrigation strategies by uav thermal infrared imagery Pedro Marques" -Silva ARSS 2020 - 2020 IEEE International Geoscience and Remote Sensing Symposium | 978-1-7281-6374-1/20/$31.00 ©2020 IEEE | DOI: 10.1109/IGARSS39084.2020.9323624