Design concept of high reduction ratio irreversible drive for high voltage switchgear application

[1]Joshi Yogendra P, [2]Dr. Prashant Nehe

[1]PG Student, [2]Associate Professor
[1,2]Mechanical Engineering Department,
[1,2]Gokhale Education Society's R H Sapat College of Engineering, Management studies and Research, Nashik, India 422005

Abstract—Disconnectors are offload devices used in the high voltage electrical network substations to ensure isolation of the power supply line. It is mainly installed in conjunction to the air insulated circuit breakers so that the load switching or fault current switching is performed by circuit breaker and after that the disconnectors are operated when there is no flow of current through the line. Disconnector is operated by means of a drive mechanism which provides higher torque output with input from manual or motor operation. Thus the drive is categorized as manual drive or motor drive. In this research paper, the drive gearbox design methodology is explained with reference to the requirements as per the functional requirements as well as according to the international standard for the disconnector product. The requirements mentioned in the standard are with reference to the different conditions the disconnector is experience during its complete service life and the different climatic conditions, where the product is being installed. The drive design answers the requirement of disconnect and earthling switches with higher torque requirements in the range of 1000 to 1200 Nm. The design is successfully validated through actual tests to ensure suitability of the drive for complete lifespan of disconnector under various conditions of operations as specified in international standards.

Keywords— Disconnecting Switch, Gear Drive, High Reduction Ratio, Worm Gear Pair

I. INTRODUCTION

All Disconnector is one of the important substation equipment which mostly operates on offload condition of the power circuit. This device is connected in conjunction to circuit breaker, which operates on load conditions or even at faulty and overload condition of the circuit. Thus, circuit breaker is operated first to ensure there is no current flowing through the circuit and then only disconnector is operated. The disconnector should be capable to carry normal load currents and sometimes overload current and fault current for short durations.

Earthing switch is usually associated with disconnector to ensure there are no trapped charges in the supply lines / cables, which induces in them due to high voltage & capacitance, after the circuit is isolated. These trapped charges are not safe to touch and may cause hazards to operators & other electrical and electronic components when connected accidentally [1]. Earthing switch when operates to close condition it connect the isolated lines/cables and carry these charges to earth pits. Once the lines are discharged, they are safe to touch or connected to other equipment to monitor and measure some parameters as required during maintenance.

From the overall health and safety requirements of the electrical network and substation practice there are certain operational requirements of disconnector and earthing switch, which must be qualified during its service life. Thus the evaluation of disconnector and earthing switch are carried out during the design finalisation.

With the operational requirements as explained above there are certain requirements with reference to the installation type and location which affect performance of these devices. The general installation is in outdoor substations, where the switches are subject to rain, wind pressures, pollution, ice, exposure to sun radiation etc. as well as extreme environmental conditions such as earth quakes, floods and so on.

Following are the major role of disconnector and earthing switches:

1. To guarantee the safety for the people working on the high voltage network, providing visible and reliable air gap isolation of line sections and equipment.
2. Load sharing (bus transfer) – connect and disconnect different busbars for power distribution.
3. Bus / System Earthing – to discharge isolated lines.
4. Inductive / Capacitive switching

   Figure 1 shows the general arrangement of the 1-phase disconnector and earthing switch. It shows major components and their locations in the complete assembly

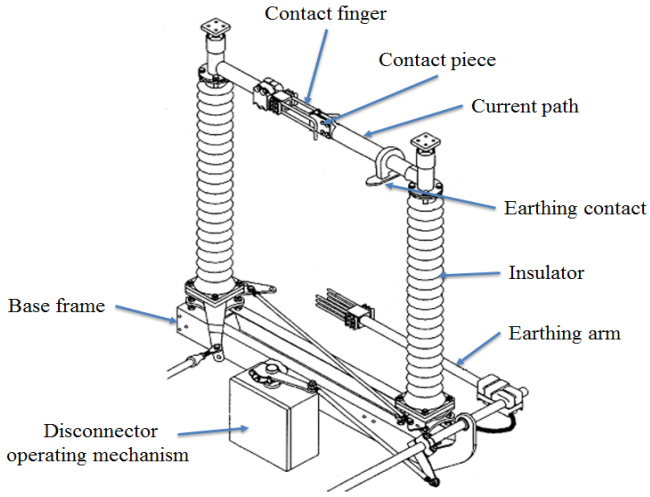

Fig. 1 General arrangement of disconnector and earthing switch [2]

II. Aims and Objectives

Looking at the available drives and their capacity of torque output there was no available solution for worm geared drive with operating torques in the range of 1000-1200 Nm. Thus, this paper focuses on the design methodology for disconnector drive, fulfilling the requirements of technical review specifications, which were finalised as the criteria.

In order to prove the fulfilment of the technical specifications design calculations are performed.

Adaptation of design in the disconnector is finally qualified based on the fulfilment of the requirements given by the standard IEC62271-102 [3], which is the product standard and company standards of qualifying the component designs for mass manufacturing. Thus to qualify above following qualification sequence is followed,

1. Literature review, design conceptualisation
2. Design verification by calculations
3. Prototype assembly and verifications.
4. Mechanical endurance test for 10000 no of operating cycles, as per the procedure mentioned in the product standard.

III. Literature Review

The operating mechanism is one of the major components of disconnector. It has to supply required energy so that moving arm of disconnector can reach its end position and should be able to break capacitive current. With increase in the power demand more focus is shifted towards high voltage equipment and safety. More phase-to-phase distance is required for high voltage supply, due to this length and weight of the moving arm increases and in turn more energy is required from the drive to operate the arm. Different types of high voltage disconnector drives are shown below,

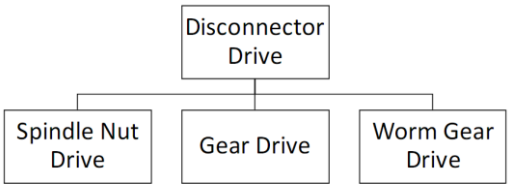

Fig. 2 Types of Disconnector Drive

There are different types of disconnect drives are used, which are described below,

Spindle-Nut Mechanisms for Disconnector Drive: Patent publication no. US 5024115 "Spindle Drive" [4] used for generating a rotational motion for a high voltage disconnector. It includes a guide housing in which a drive spindle is mounted. The spindle is driven by a motor through a spur gear. A slide nut is mounted on the spindle by thread locking connection. Slide nut carries a carriage along with it, which is slidable in guide housing. Slide nut seats inside pocket of carriage. Sliding of carriage is affected by means of retaining bolts which pass through the carriage while being offset at a fixed distance from the drive spindle and being reinforced with rollers for sliding in groove provided in extruded section. One of the specially shaped components sliding block disk are mounted on a drive shaft on both sides of the carriage. It has circular profile cut for retaining bolts as shown in Figure-3

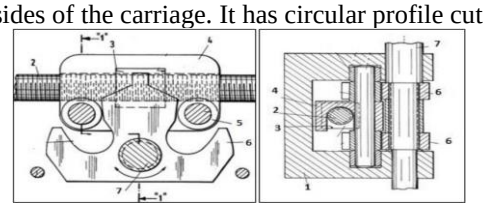

1. Guide Housing, 2. Spindle, 3. Slide Nut, 4. Carriage, 5. Rollers with retaining bolts,
6. Sliding block disk, 7. Output shaft.

Fig. 3 Spindle-Nut Drive [4]

Gear Mechanism for Disconnector Drive: Patent publication no. US3508179 by Bernatt J et al, "Motor driven operator for high voltage switch" [5], has used chain and gear drive for torque enhancement from motor. Drive consists of motor, motor shaft is connected with spur gear, after which reduction is done by chain drive, bevel gear and spur gear. Provision is provided for manual operation and decoupling of output shaft. Limit switches are used for de-energizing electrical circuit when using manual operation. This type of drive can be used for 34.5kv to 345kv three phase disconnectores. This drive has a major disadvantage due to its weight. Its weight as stated was 1300 pounds

Worm Gear Mechanism for Disconnector Drive: Patent publication no. CN 2517092Y "High pressure disconnecting switch motor actuating mechanism" [6] discusses a drive model which has a mechanical transmission, electrical control device, an electric lock box and manual means of operating the drive. Drive consists of a miniature motor which drives worm gear; this worm gear drives the worm wheel. A spur gear is mounted on the shaft of worm wheel, which is in contact with two double shift gear mounted on bearings or bush on the output shaft. A further reduction is obtained by connecting these gears with another double shift gears mounted on bearing or bush of the input shaft, a final reduction is obtained by connecting a spur gear with these double shift gears. This spur gear is mounted on output shaft (as shown in Figure 4 (a) and (b)). The four-speed reduction is used for transmitting torque to the output shaft. Output shaft can be mounted vertically or horizontally, it can rotate clockwise or counter clockwise, by linking arm, connecting rod and the mechanical stopper enable organizations spindle angle limit exact location. Electrical control devices from the power switch, buttons, contactors, limit switches, auxiliary switches and terminals, etc., to control the motor reversing, to achieve sub-closing operation mechanism, and can be operated locally and remotely operated, and electrical interlock and signal indication, etc. to achieve with the circuit breaker device. After making the four shifts the torque of 750N.m-1200N.m can be transmitted to the output shaft. Box made of steel sheet, dimensions 550x415x380, has two front doors; there is a small door, manual-electric locking device mounted inside small door.

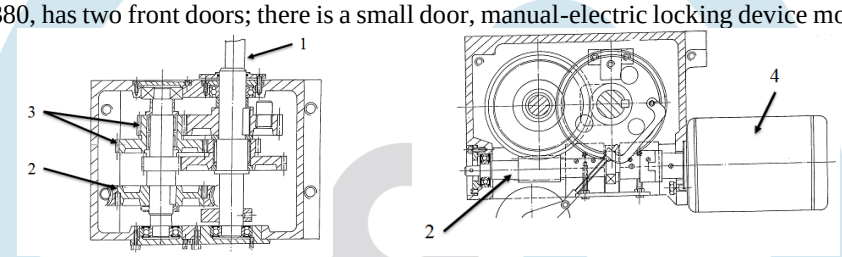

(a) *(b)*

1. Output shaft, 2. Worm Gear, 3. Spur gear train, 4. Motor

Fig. 4 Four Speed Reduction Worm Gear Drive [6]

IV. RESEARCH METHODOLOGY

Based on the literature review various concepts of drive are studied and the one which satisfies the requirements is finalised. In designing the new disconnector drive it is decided to implement the modular design concept with maximum standardisation so that the drive can be easily modified to suit the different torque requirement.

A modular design is an approach for product designing which is used to produce a complete product by integrating or combining smaller parts that are independent of each other.

V. DESIGN PROCEDURE FOR DISCONNECTING SWITCH DRIVE

The new disconnector drive is designed in the out-put to input approach. As the output requirement of drive is known, the second stage worm gears are designed first. Based on the data available from second stage design, first stage worm gears are designed. At finally the motor selection is done. Design procedure is outlined as below,

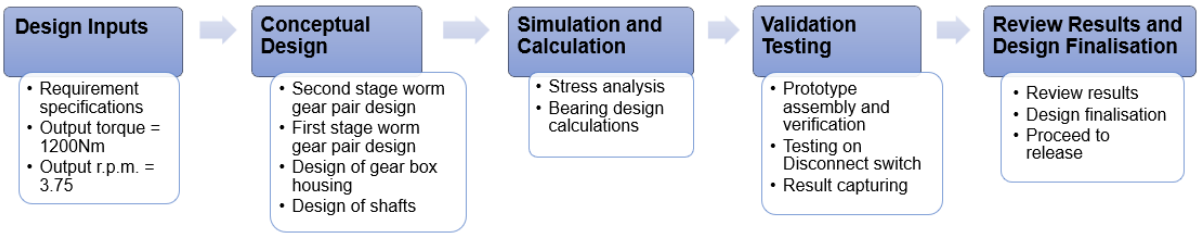

VI. . CONCEPT DESIGN DISCONNECTING SWITCH DRIVE

Different concepts for the new disconnector drive are shown in the Fig. 5. Four different concepts are shown with individual block showing independent module which can be changed according to requirement of torque. Concept-1 consists of a spur gear box and bevel gear for torque amplification and at final reduction is obtained by worm gear. However, this arrangement requires large number of spur gears and bevel gear combination to achieve large reduction. Concept-2 consists of motor, spur gear box and worm reduction unit aligned in same direction, due to the arrangement of all the components in single direction, length of the drive will be more. Concept-3 has same components as Concept-2 but orientation of gearbox and motor is changed to save space. But still this arrangement requires large number of spur gears. Concept-4 consists of double worm gear reduction gear box.

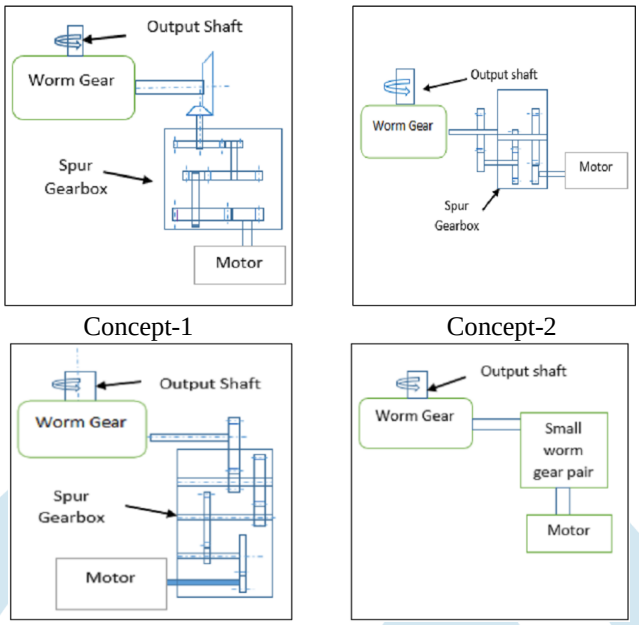

Fig. 5 Different concepts of Drive layout

For same reduction worm gear requires less space and component as compared to other concepts. So, concept-4 was selected as shown in Fig. 6. Modularity concept was easy to implement in concept-4, as we have to change only number of teeth on worm wheel in primary and secondary stage. Secondary worm gear will be designed for maximum torque.

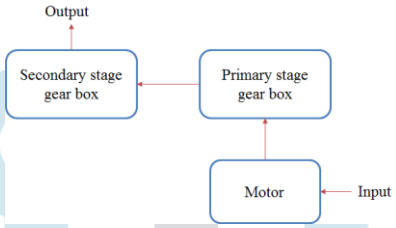

Fig. 6 Layout of New Disconnector Drive

VII. . RESULTS AND CONCLUSION

In this paper design methodology of the disconnector drive is explained which satisfies the requirements specified in the objective section of this document.

A detailed methodology is formulated to achieve the goal of this project, which covers inputs for the project, conceptual design, design calculation and simulation, validation tests and finally review the results and design finalization.

For validation of the drive by mechanical test, which is carried out as per the IEC standard 62271-102 (product standard for the Disconnector), auto test bench is used to give command to drive for operations and also to record the results of important characteristics of the operation.

The results are then reviewed for these characteristics to conclude the results of the test conducted. The summarized results shows that the characteristics measured before and after the tests are within the limits specified in the IEC standard. Thus the test is completed successfully on the disconnector with new drive.

REFERENCES

1. Vosloo WL, Holtzhausen JP, (2008), “High Voltage Engineering–Practice and Theory”, University of Stellenbosch, pp. 20-25.
2. Application Guide, “Disconnecting Circuit Breaker”, ABB Ltd., Vadodara.
3. International standard “High-voltage switchgear and controlgear – Part 102: Alternating current disconnectors and earthing switches”
4. Hahn W, Lutz F, Jahn M, “Spindle Drive”, U.S. Patent 5024115, June-18, 1991
5. Bernatt J et. al, “Motor Driven Operator for High Voltage Switch”, U.S. Patent 3508179, April-21, 1970.
6. Changfu L, Liping F, “High-Pressure Disconnecting Switch Motor Actuating Mechanism”, Chinese Patent 2517092Y, October-16, 2002.