A Systematic Designing, Analyzing and Building of RC Model of 5th Generation F-22 Raptor Plane.

Sandeep Pokharker , Abhishek Singh, Ajay waghate, Harshjeet Shinde ,

of
jspm's bhivrabai sawant polytechnic waghoi, pune.

ABSTRACT: -
A RC (radio controlled) Plane is small flying machine based on Aeromodelling. i.e. (The flying machine is get controlled by a transmitter or controller on ground). The flying of the plane is controlled by movement of servo motors onboard of the plane. The working of aerodynamics of this aircraft is same as that of working of large aircraft. The plane is design such a that to have optimum lift and drag characteristics. The takeoff of the plane is get achieved by choosing the correct width and length of the plane. The material used for making the body of the plane is depron sheet of thickness 5 mm. The fly sky- FS-i6 (6 channel) transmitter is used for sending the signal. The LIPO Battery of 2200 MHA is used with battery backup of 15 minutes in one charge.
Keywords: - RC Plane, Aeromodelling, aircraft, aerodynamics, depron.

1. INTRODUCTION: -

The main aim of the project is to systematically Design, Analyze and Build the RC Model of 5th Generation fighter (F-22 RAPTOR) Plane. The word RC itself define the plane is the object having no pilot and controlled by the radio transmitter or controller on the ground. Due to this planes are offen called as UAV (unmanned aerial vehicle). Hence to achieve the above aim of successful designing and building of RC plane an extensive literature review was done in determining the plane's wing span, choosing the right motor, controller for operation and making it fly. Rick Tressler [1] provide detailed information on RC controlled aircraft design and building. Ryan et al [2] provide insight into improved aerodynamics performance, improved maneuverability and hover capabilities. Based on the above references the plane is build and design.

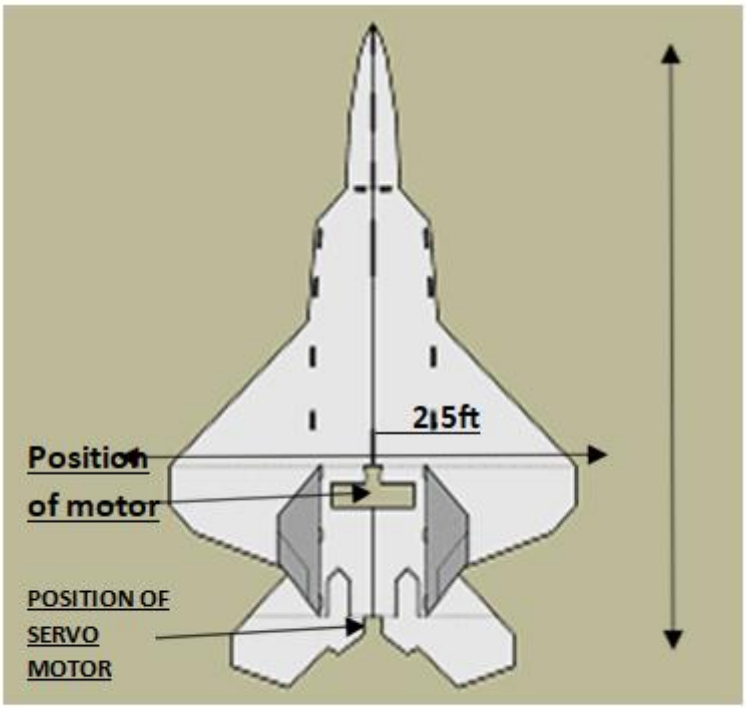

Fig (1): - Basic configuration of RC plane

Figure 1 shows the basic configuration of the RC plane and the various proportions and the parameters which have to be used in order to ensure a balanced flight.

2. MANUFACTURING OF THE PLANE: -

After finalizing upon the parameters the process of building the prototype was started. These were the procedures adapted in building of various parts of the model.

A. WING

Since the lift force was 137kN, a material which could withstand that force and was light weight had to be a chosen. Hence high density depron of thickness 5mm was a considered a good option. Initially the wing was cut to 76.2 cm using the technique of hot wire cutting and then sanded using high and low grade sandpaper to perfection to obtain the final shape. A spar made of metal was inserted in order to withstand impact forces.

B. MOTOR MOUNT AND BLDC MOTOR

A motor mount was made of 3D Mold and the holes were made in the mold for screw tighten. It was bolted so as to prevent its movement and withstand the thrust produced by the motor basically to ensure that it didn't detach from the depron as show in the figure of (the basic configuration of RC plane) at any point in time. The motor is fixed to the motor mount (we had a '+' shaped motor mount) with screws.This configuration is then placed in the middle of the fiberglass (between 5cm x 5cm and 6cm x 6cm) piece and the locations of the screws are marked. The 4 holes are carefully drilled onto the fiberglass sheet.Now, a (6cm x 6cm) piece of corolla's is taken and the fiberglass is stuck to it with the help of a glue gun. Holes are punched into the coroplast from those in the fiberglass.The motor along with its mount is then screwed onto the fiberglass-coroplast piece with motor on the fiberglass side**.**

C. SUPPORT STICKS AND SERVO INSERTION

The support sticks used is made up of bamboo. its length is 12 inches which will give a perfect support to depron material. The 2 servo motors were used in the down side of the wings, which will make plane stable when it is in air.

2. BLOCK DIAGRAM.

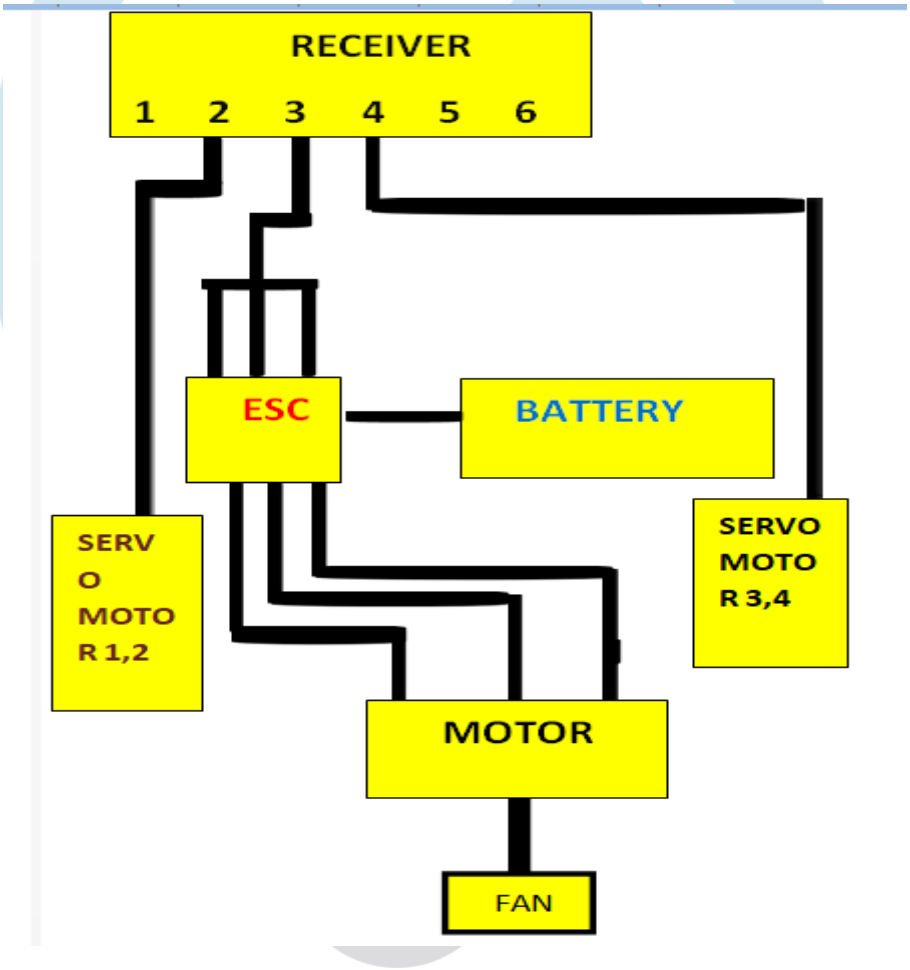

Fig (2): - BLOCK DIAGRAM OF F -22 RAPTOR

The above figure shows the basic electronic connection of RC – PLANE F-22 raptor.

4. working principle: -

The transmitter continuously communicates with a receiver within the craft that sends signals to servomechanisms (servos) which move the control surfaces based on the position of joysticks on the transmitter. The number of controls required differs between planes; the simplest RC airplanes will have just one single control while the more complex planes may have five, six or more. Your 'average' RC plane will have three or four controls, this is by far the most common number, especially on a trainer plane. Incidentally, any controllable function of a radio controlled model is referred to as a **channel**. An RC airplane with control to, say, four functions will be called a 4-channel plane.

Primary Airplane Controls

RC airplane controls are, of course, the same controls as those found on real planes and they control the model in exactly the same way. The four primary controls of an RC plane are, in no particular order, **throttle**, **elevator**, **ailerons** and **rudder**. The elevator, ailerons and rudder are known as control surfaces and the picture below shows where these are located on a plane.
The control surfaces are the hinged sections of the **flying surfaces** (wing, tail plane and fin) and each control surface moves - up and down in the case of elevators and ailerons, and left and right in the case of the rudder.
This movement alters the airfoil shape of the entire flying surface, and thus changes the amount of lift/downforce/side force being generated by that flying surface. The airplane responds to these changes, resulting in a change in attitude and/or direction. By *attitude*, we mean the plane's orientation in relation to the horizontal. For example, if the plane is pointing upwards it has a nose-up attitude.

THROTTLE

Throttle controls engine speed and hence how fast or slow the propeller spins. In turn, this changes the amount of thrust produced.
On a glow plug RC airplane engine, the throttle works the same as any internal combustion engine throttle, by changing the amount of fuel and air that enters the combustion chamber of the engine.

The carburetor is operated by a single servo connected to the venturi of the carb, which opens and closes (thus changing the fuel/air mixture) in response to your throttle stick movements on the transmitter.
On an electric RC airplane, the throttle is usually referred to as **motor power** rather than *throttle*. Very basic electric RC planes (*i.e.* toy ones) might not have proportional f switch instead.Electric planes that do have control to motor power but just a simple on/off proportional control to motor power have an electronic speed control, or **ESC**, that controls power to the motor in direct response to your TX stick movements.
In the air throttle not only controls the forward speed of the airplane but also, more importantly, the rate of climb and descent, because different amounts of lift are generated at different airspeeds. For example, if your landing approach path is too low you can make the airplane rise slightly without changing speed much, simply by opening the throttle instead of using up elevator. Conversely, closing the throttle will cause the airplane to sink before the speed reduces.
Using throttle/motor power in this way is the correc*t* way to fly your RC airplane, but many pilots use the elevator to control altitude and rates of climb and descent rather than engine speed.

EIEVATORS

The elevators are the hinged section of the tail plane, or horizontal stabilizer, at the very rear of the airplane and are the single most important control surface. They directly affect the plane's **airspeed**.
Elevators control the horizontal **pitch attitude** of the airplane, in other words whether the nose of the plane points upwards or downwards.

When elevators are deflected upwards the plane's nose is forced to point upwards, and with the elevators deflected downwards then the nose is forced downwards. This resulting nose up/nose down pitch attitude comes about as the upward/downward deflection of the elevators changes the amount of down force being generated by the tail plane.

It's worth noting that a plane can still fly level, or even be descending, with a very nose-up attitude but a nose-down pitch attitude will always result in the plane entering a dive. Elevators should be used in conjunction with rudder and/or ailerons when making a turn, to maintain altitude during the turn and also to get the plane to bank during the turn.

AILERONS
Not all RC airplane controls include ailerons, in fact many 3-channel trainers use rudder instead. But where fitted, ailerons control the **roll** of the airplane about its longitudinal axis (imagine a straight line running through the center of the fuselage, from nose to tail).
Ailerons work in pairs and are found on the trailing (rear) edge of the wing, and they work opposite to each other *i.e.* when one aileron moves up, the other one moves down and vice versa. Ailerons work by changing the amount of **lift generation** over the wing.
As an aileron moves upwards so it disrupts the smooth airflow over the wing surface and so lift is reduced slightly on that wing. Over on the other wing the aileron moves downwards and increases lift slightly. As a result, the airplane tilts and hence rolls towards the side that's experiencing less lift.
When up elevator is applied at the same time as ailerons, the airplane is pulled round in to a banked turn; the ailerons cause the plane to roll and the up elevator causes the nose to pitch round in that direction of flyingAilerons are used in all aerobatic maneuvers that involve a rolling motion.

RADAR

The radar is the hinged section of the fin, or vertical stabilizer, at the rear of the airplane.
It's used for directional control by changing the **yaw** of the airplane, and works in the correct sense *i.e.* moving the radar to the left causes the airplane to turn left and vice versa. Applying radar makes the nose of the airplane point to the left or right, but rader alone does not make the airplane roll like ailerons do. It's actually the **dihedral**, or the upward 'V' angle of the wing when viewed from the front, that makes the plane roll when radder is applied; a plane with very little or no dihedral will have a much flatter turn when rader is applied. This is all to do with a natural force called Dihedral Effect.

Planes with ailerons require less dihedral than planes that rely solely on a rudder for turning, as the ailerons make the plane roll.

Rudder is also very important on the ground, it's the one control that will keep your RC airplane tracking straight during a take-off run or landing roll, if your plane isn't fitted with a steerable nose or tail wheel.

5. ADVANTAGES: -
1. High speed.
2. High agility.
3. light weight.
4. Long range.
5. cheap in cost.
6. less maintenance.

6. DISADVANTAGES: -
1. Need skilled person to operate.
2. less battery backup.
3. Cannot use in rainy season.

7. APPLICATION: -
1. It is used in scientific research.
2. Used for defence purpose.
3. It is used in aeromodelling
4. it is used for spying purpose.

8. CONCLUSIONS: -
As affordable hardware is more available and more diverse and virtually all of its related sub-systems are working, and as costs and complexity to operate decrease massively, RC aircraft become a common feature in many applications quickly. In this paper, the systematically Design, Analyze and Build the RC Model of 5th Generation fighter (F-22 RAPTOR) Plane has been done by the authors. It was observed that by optimizing the design parameters, the performance of radio-controlled aircraft can be enhanced.

REFERENCES: -

1. Rick Tressler, "Getting Started with Radio Controlled Model Airplanes, A Beginner's Tutorial", 2008, www.ricktressler.com.
2. Ryan B. George et al, "A differentially driven flapping wing mechanism for force analysis and trajectory optimization", International journal of micro air vehicles – Vol 4, March 2012.
3. Luca Petricca, Per Ohlckers, and Christopher Grinde, „Micro- and Nano-Air Vehicles: State of the Art", Review Article - International Journal of Aerospace Engineering. Volume 214549, 2011.
4. Romney Bukolt, "Marcs Sparks",1975, www.rcpropbusters.com.
5. Reece A. Clothier, et al, "Modelling the risks remotely piloted aircraft pose to people on the ground" ,South Wright St, MS 130, Hampton, VA 23681-2199, -2004.