A Review Paper on "Smart Vacuum Cleaner"

[1]Kavita, [2]Rishi Kashyap, [3]Dileep Kumar, [4]Dileep Kumar, [5]Dr. Priyanka Jaiswal

[1,2,3,4] B.Tech Scholar,[4]Assistant professor, [5]Head of the Department
[1,2,3,4,5]Department of Electronics and Communication Engineering,
[1,2,3,4,5]Goel Institute of Technology and Management, Lucknow, India

***Abstract*— In the ongoing furious schedule, cleaning our homes, room and other surrounding is more exhausting a result of sporadic working timetable which results a challenge to maintain both home and office together particularly for ladies. As of now, there are vacuum cleaners which expect people to deal with it manually also which consumes bunches of significant investment. With the progression in technical innovation there is a critical need to execute vacuum cleaner which works without human intervention that can saves valuable time of the present age. We thought of a drive "Smart vacuum cleaner" that computerizes cleaning process through a robot which explores region and keep away from snags with the assistance of sensors having an implanted vacuum cleaner , this total framework runs on rechargeable batteries. This system not only saves time but also cost effective as compared to market.**

***Keywords*— Cleaning, Innovation, Intervention, Smart Vacuum Cleaner, Automation, Robot, Technology**

I. INTRODUCTION

In the modern era technology is making human life easier and more comfortable. One of our most important responsibilities is to clean the environment around us. People are more likely to get allergies, watery-eyes, cold, cough, rashes, etc. because there is dust everywhere. Vacuum cleaners are used to clean the home and other places, such as the car, carpets, and floor, among other things. Because social distance must be maintained in the current COVID situation, more people cannot clean together. This has been put into action in both urban and rural settings. There are currently hand-held vacuum cleaners on the market. An automated vacuum cleaner is designed for this application. It consists of a car with an embedded vacuum cleaner that detects obstacles. Ultrasonic sensor is placed on a servo motor to the front of the vehicle which is utilized to quantify the distance in the event that any deterrent is recognized. The vehicle changes direction if it detects an obstacle. A pipe is attached at the cleaner's front to collect dust from the floor. There is chamber in the cleaner to collect the dust. It should be manually taken out and cleaned once it is full.

II. LITERATURE SURVEY

Automatic Floor Cleaning Robot Using Arduino and Ultrasonic Sensor by Irawan. In the particular document, details about an Ultrasonic sensor, motor shield L293d, Arduino microcontroller, Servo and DC motor is covered in this document. This system works when the Arduino Uno microcontroller use ultrasonic sensor as a distance detector and a DC motor as a robot driver, then the DC motor is driven by the Motor Shield L298. When an ultrasonic sensor sense any obstacle in front of it, the robot will automatically look for a direction that does not have any barrier to the floor cleaning robot.[1]

Design and Development of Automatic Cleaning and Mopping Robot by P.S. Aditya. This paper reports "ways to reduce the expense of your robot." The design process for building the cleaning robot is what was covered at the paper's beginning. The method for that begins with choosing how cleaning and mopping will be carried out, followed by the mechanical design of the chassis. By applying their approaches, the robot could clean around 90–92% of the area, and the remaining portions could be cleaned using mobile devices that could be Bluetooth-connected to the robot. [2]

Design and Manufacturing of Automatic Classroom Vacuum Cleaning Robot by Aniket A Somwanshi. This study discusses the design prototype of an automatic classroom vacuuming robot employing user interface elements for electronic device power management in office and consumer settings. This article also provides a summary of the main research on the design of wheels, chassis, motor calculations for navigation, and hover design for autonomous hover cleaner implementation.[3]

Development of a vacuum cleaner robot by T.B. Asafa.Planning. A Robot Design of the electrical parts, viable communication with true items, limitations in development and numerous other significant variables should be considered prior to building a model. Dealing with estimation and plan without anyone else utilizing experimentation technique takes a ton of time anyway this paper helped us in such manner, as it discusses the model plan, limitations and cleaning region alongside the plan and circuit format communication moreover Execution assessment of the model was simple because of this paper.[4]

Vision-Based Dirt Detection and Adaptive Tiling Scheme for Selective Area Coverage by Balakrishnan Ramalingam. This paper examines about data with respect to visual soil location calculation and a versatile tiling-based region inclusion plot for reconfigurable morphology robot. A three-layer sifting structure was utilized for Visual soil identification, which incorporates edge discovery, occasional example recognition channel, and clamor separating. There were two analyses performed to approve the vision-based versatile particular region inclusion plot in their work. The goal is to expand the framework conveyance limit ultimately. Recreation results exhibit that the CSF gives the best presentation regarding hit rate and framework conveyance limit.[5]

Lessons Learned from Robotic Vacuum Cleaners Entering in the Home Ecosystem" by F Vaussarda. This paper accentuates on the most proficient method to manage the shortcomings of past automated vacuum cleaners, gain from them and to conquer these

flaws actually by rolling out fundamental improvements in the plan of the robot. Dissecting the energy emergency that might happen later on age this report additionally has archived about the productive use and the board of energy by upgraded power circulation in the system.[6]

III. REQUIREMENTS

Hardware

1. ARDUINO UNO

Arduino Uno is an open-source microcontroller board based on the Microprocessor chip ATmega328P and this board is introduced by Arduino.cc and at first released in 2010. The board contains 14 digital I/O pins (six wqypped for PWM output) and 6 analog I/O pins, and the board can be programmed with the Arduino IDE (Integrated Development Environment) for various projects, through a kind B USB link.

2. MOTOR DRIVER SHIELD L293d

The Arduino L293D motor driver shield which is capable of driving different types of motors. The most well-known types utilized for automated applications incorporate DC, servo, and stepper motor, these motors typically can't be driven straight by Arduino or another microcontroller. The main reason is higher current and power ratings of these motors, so motor driver shields are used. These shields or integrated circuits separate a motor's power supply and use logic command from the microcontroller circuitry. L293D is the one of the most popular motor driver shields used with Arduino board.

3. SERVO MOTOR

A servomotor (or servo motor) is a easy electric powered motor, controlled with the help of servomechanism. It is a linear actuator or rotating actuator that provides precise control of linear or angular position, acceleration. The fundamental reason for the usage of a servo is that it provides angular precision, i.e. it will simply rotate as we want after that is stops and wait for the following signal to take action as per command. Small servo motors are getting used in Arduino starter kits, as they are smooth to operate as part of a small electronics projects.

4. ULTRASONIC SENSOR

An ultrasonic sensor is a digital device that measures the distance from the object by emitting ultrasonic sound waves, and converts the reflected waves in electrical signal. Ultrasonic waves travels faster than the speed of sound. Ultrasonic sensors have two main parts: the transmitter, which emits the waves using piezoelectric crystals and the receiver, which receives the waves after it has reflected back from the object. Ultrasonic sensors are used broadly speaking as proximity sensors. These are getting used in automobile, self-parking technology and anti-collision protection structures.

5. DC MOTOR
6. WHEELS
7. BATTERIES
8. PORTABLE VACCUM CLEANER

IV. METHODOLOGY

The Figure 4.1 represents block diagram of our prototype which includes components Arduino UNO microcontroller, ultrasonic sensors, motor driver shield, wheel's motors, servo motor and vacuum cleaner which are connected to the DC power supply of 12V. The microcontroller controls servo motor and wheels whenever the ultrasonic sensors detects obstacles, the microcontroller commands motor driver and to change the direction of prototype in a particular direction. Vacuum cleaner collects all the dust of the floor.

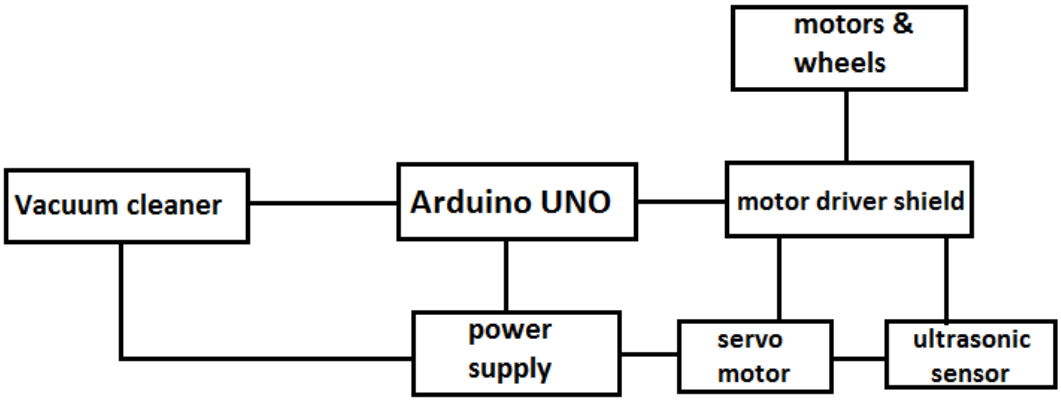

Fig 4.1: Block diagram of smart vacuum cleaner

The Figure.4.2 describes the flow of information between the components. To start the application, the person must on the power supply. The robot turns on and start collecting data like checking for obstacles through ultrasonic sensor on its path and also turns-on vacuum cleaner. If obstacle is detected, the robot stops for few seconds and changes its direction according to the program. The robot continues to moves and checks for the obstacles continuously while cleaning process on the floor.

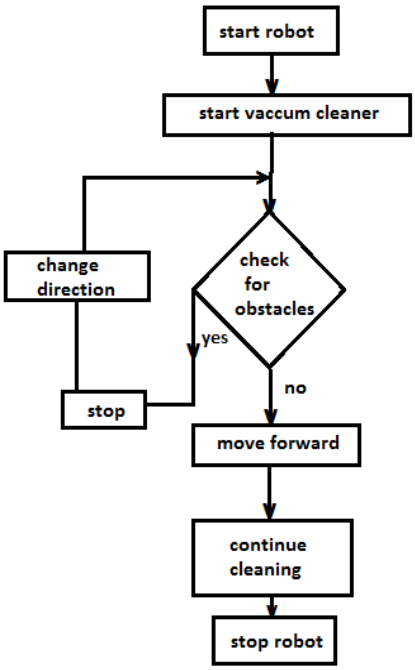

Fig 4.2: Flowchart of smart vacuum cleaner

V. IMPLEMENTATION

Implementation of prototype is a design and connection of components and hardware used to build an automatic vacuum cleaner robot prototype using Arduino and ultrasonic sensors and other equipments. Arduino microcontroller commands motor driver shield as per the inputs from ultrasonic sensor. This ultrasonic sensor functions as a distance detector which is connected to the Arduino Microcontroller so that the distance can block the robot and the servo functions as a motion controller with the Arduino Microcontroller to help move the ultrasonic sensor.

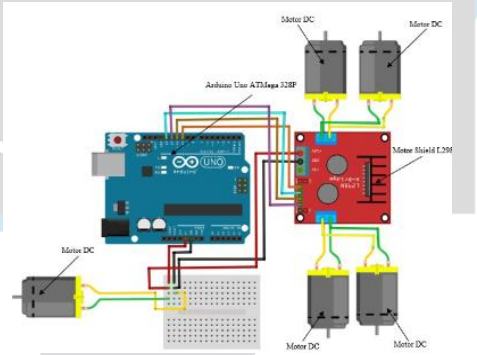

Fig 5.1: Arduino Microcontroller Circuit with Motor DC and Motor ShieldL298

In figure 5.1 Arduino Microcontroller Circuit with vacuum fan and Motor Shield L293d .This Dc motor attached to wheels functions as a robot driver which is connected to the Arduino Microcontroller by motor shield L293d so that it can run the robot and cleans the automatically and the Motor Shield L298 functions as a motion regulator connected to the Arduino Microcontroller in order to regulate the motion of the dc motor was studied by was studied by Wahyuni [9]

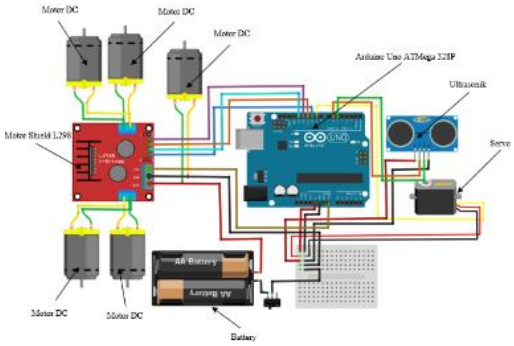

Fig 5.2: Overall layout of hardware implementation

In figure 5.2 Implementation is one of the stages in project development, where this stage is the stage of placing a prototype of an automatic floor cleaning robot so that it is ready for operation and can be seen as an effort to realize the system that has been designed was studied by VPH [10]

VI. CONCLUSION

Taking everything into account we would agree that that this robot is of fantastic use to the general public and it fulfils every one of the states of being of no damage. This robot will do all the ideal highlights with great productivity. According to the analysis, design, and implementation that has been conducted, it can be concluded that the automatic floor cleaning robot prototype is an effective solution for the cleaning workers or community members to clean floors easily studied by Liang[11]. With the headway in innovation this will most certainly end up being monstrous significant. There is extraordinary future extent of this robot and furthermore in this kind of use.

VII. FUTURE SCOPE

However, we can clearly see some points for the future, is the improvement of self-learning properties. We feel that the robot vacuum cleaner will turn out to be a lot more brilliant later on. The independent vacuum cleaner isn't yet prepared for commercialization. The future work of robot might incorporate like picture/video caught of the items with the goal that the robot can clean the whole house as per the information fed as input. The cleaning instrument on the robot can be supplanted by a hand-like construction with the goal that it can lift things starting with one spot then onto the next. Voice controlled velocity of robot rather than a controller, automatic charging, and so forth. All the upgrades will be made with the goal that this task could give more advantages and benefits. Thus, hope that this project could extend even much more all through every one of the forthcoming ages.

VIII. REFERENCES

[1] Irawan, Yuda, Muhardi, Ordila, Rian, AND Diandra, Roni. \"Automatic Floor Cleaning Robot UsinArduino and Ultrasonic Sensor\" Journal of Robotics and Control(JRC) July 2021

[2] P.S. Adithya, R. Tejas, V. Sai Varun, B.N. Prashanth, “Design and Development of Automatic Cleaning and Mopping Robot”, IOP Conf. Series: Material Science and Engineering 577(2019).

[3] Aniket A. Somwanshi , Prof. Sanjay B Matekar, 2019, Design and Manufacturing of Automatic Classroom Vacuum Cleaning Robot, INTERNATIONAL JOURNAL OF ENGINEERING RESEARCH & TECHNOLOGY (IJERT) Volume 08, Issue 10 (October 2019),

[4] T.B. Asafa, T.M. Afonja, E.A. Olaniyan, H.O. Alade, “Development of a vacuum cleaner robot”, Alexandria Engineering Journal, Volume 57, Issue 4, December2018.

[5] Balakrishnan Ramalingam; Prabakaran Veerajagadheswar; Muhammad Ilyas; Mohan Rajesh Elara; Arunmozhi Manimuthu, “Vision-Based Dirt Detection and Adaptive Tiling Scheme for Selective Area Coverage”, Hindawi. December-2018.

[6] F.Vaussarda, J.Fink, V.Bauwens, P.Retornaz, D.Hamel, P.Dillenbourg, F.Mondada, “Lessons Learned from Robotic Vacuum Cleaners Entering in the Home Ecosystem”, Robotics and Autonomous Systems · October2014

[7] Vijayalakshmi, M. & Baljoshi, Bhargavi & Lavanya, G. & Master, Gouri & Sushil, Gurav. (2020). Smart Vacuum Robot. 10.1201/9781003052098-10.

[8] Wahyuni, Refni; IRAWAN, Yuda. Web-Based Employee Performance Assessment System in PT. Wifiku Indonesia. Journal of Applied Engineering and Technological Science (JAETS), 2020, 1.2: 60-69.

[9] V. P.H., L. V., M. K., R. P.S. and S. R., "Sweepy – The Smart Floor Cleaner," 2018 International Conference on Design Innovations for 3Cs Compute Communicate Control (ICDI3C), Bangalore, 2018, pp. 124-126, doi: 10.1109/ICDI3C.2018.00035

[10] Liang Yuming, Wen Ruchun, Zhang Zhenli and Zhu Junlin, "Dynamic coverage path planning and obstacle avoidance for cleaning robot based on behavior," 2011 International Conference on Electric Information and Control Engineering, Wuhan, 2011, pp. 4952-4956, doi: 10.1109/ICEICE.2011.5777555