# Design a closed loop PFC based Bridge-less Landsman Converter

M. Reddy Nagaraja [1], Syed Niha [2],], J. Rupesh [3], R. Jaswanth [4], Dr. C. Kamal Basha [5],
UG Students [1 2 3 4], Professor [5],
Department of Electrical and Electronics,
Madanapalle Institute of Technology & Science, Madanapalle, 517325, India

***Abstract:***

**This work focus on design of closed loop BL landsman converter to enhance power factor of the input AC. This is accomplished by substituting the prevalent diode converter with a newer, high quality landsman converter that is equipped with power factor tuning. The recommended PFC converter is regulated with a single entity to attain consistent DC link voltage and to boost power factor closed to unity, with the simulation carried out using MATLAB. At the front end, landsman-based PFC converter is proposed to reduce the harmonics present in AC source filter circuit with a rating of 90 - 250 V as an AC input and the DC link output voltage ratings are from 50 – 200 V.**

**Keywords: Landsman converter, power factor, proportional integral controller**

## 1.INTRODUCTION:

In the present scenario, Electric mobility is driving more significant for efficient transport sector also act at battery storage. An EV is a shortened acronym for an electric vehicle. EVs are vehicles that are either partially or fully powered on electric power. Electric Vehicles have low running costs as they post for maintaining and also very environmentally heave friendly as they we little or no fossil fuels.

Landsman converter encompasses of the inductor, capacitor, switching devices and diodes. In this the input is alternative supply voltage is given to the converter. In between the input and converter, we introduced the filters. Lowpass filter LC reduces the harmonics [1] present in the input current which later convert this into DC. Here we have used the bridgeless landsman converter which operates in both positive and negative cycles simultaneity based on the input voltage wave form. DC link is used for all converter which reduces the ripples, and collects the output voltage at the end.

Landsman converter with power factor correction control unit mainly used to intensify input current shaping which determines power factor values. Boosting the pf near to unity by making the phase difference between current and voltage at input side [2].

To control the closed loop, we proposed the PI controller which is mostly used for all automotive controllers.

As compared to previous methods of converting AC to DC, the BDR converter have more losses because it consists of more power at the input side mains [3].

This landsman converter is modified by using CSC (canonical switching converter) [4-8] with an addition of an inductor at the output side to get better results.

**Fig:1 Bridgeless landsman converter**

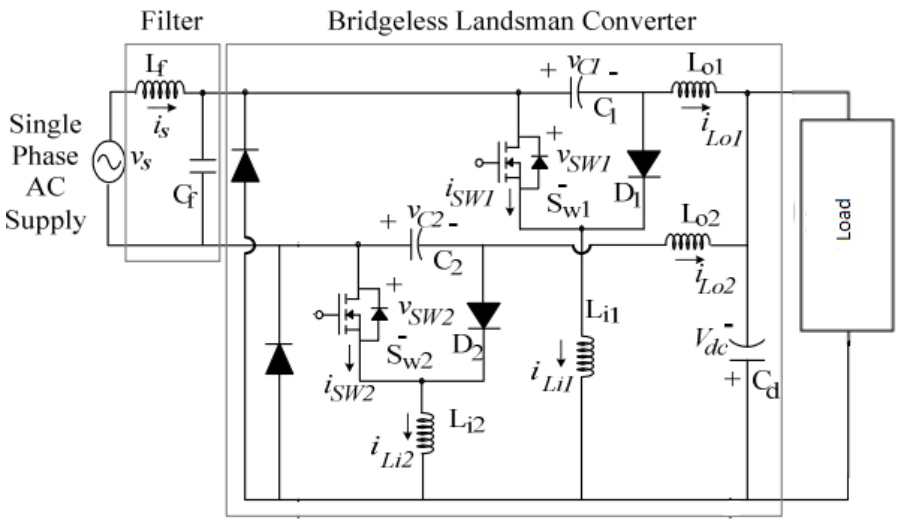

## 2. OPERATION OF BL LANDSMAN CONVERTER

The Landsman converter with PFC bridgeless configuration is designed for working in DICM for inbuilt power-factor improvement at AC supply. The operating principle of converter in negative and positive cycles of supply voltage is shown in Fig.2,3.

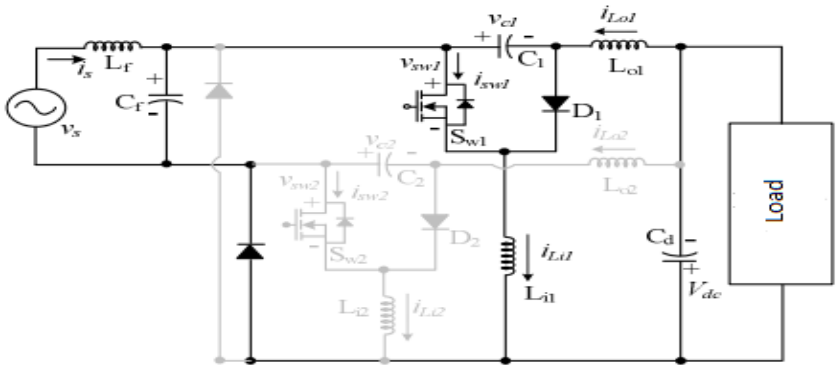


**Fig:2 Operation of landsman converter for positive cycle**

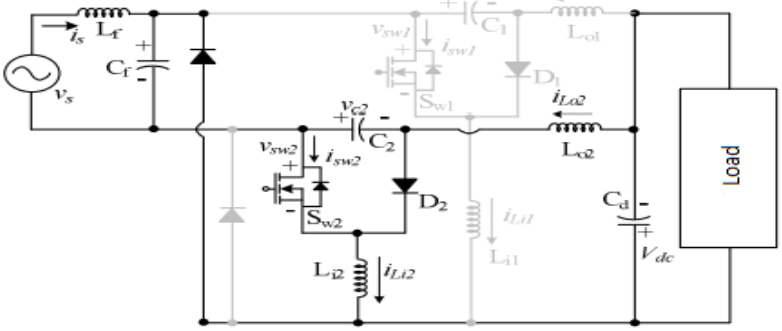


**Fig:3 Operation of landsman converter for Negative cycle**

### 2.1 MODES OF OPERATIONS:

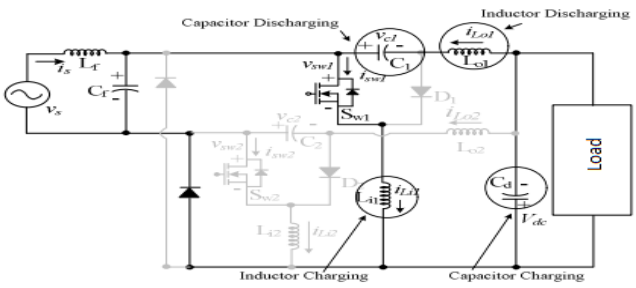


**Fig:2(a)**

***Mode I:*** When switch ($Sw_1$) is turned on, as shown in Fig. 2(a), the energy from the source and kept energy of the in-between connecting capacitor ($C_1$) to input inductor (Li1). The output inductor (Lo1) begins to settle, and the intermediate voltage. As seen in Fig. 4, the capacitor (vC1) begins to deplete as the input inductor current (iLi1) and DC voltage (Vdc) begin to rise. (b). The calculated value of the in-between capacitor is sufficient to store enough energy to maintain a constant voltage during the operation.

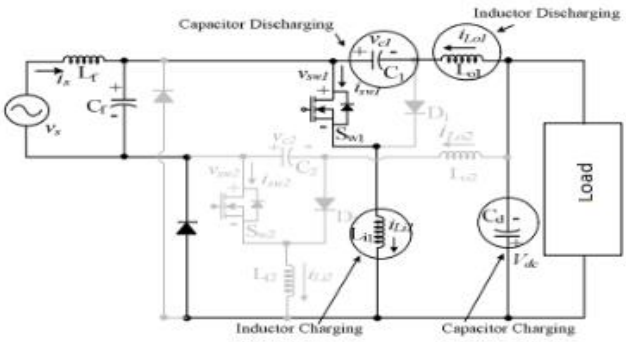


**Fig:2(b)**

***Mode 2:*** The mode is shown in Fig. 2(b), when the switch is turned off while this portion of the converter is running. Between them, input inductor Li1 jumps out of charge while capacitor C1 and DC bus side inductor Lo1 start charging with supply current; along these lines, vC1 bounces expanding during this technique.

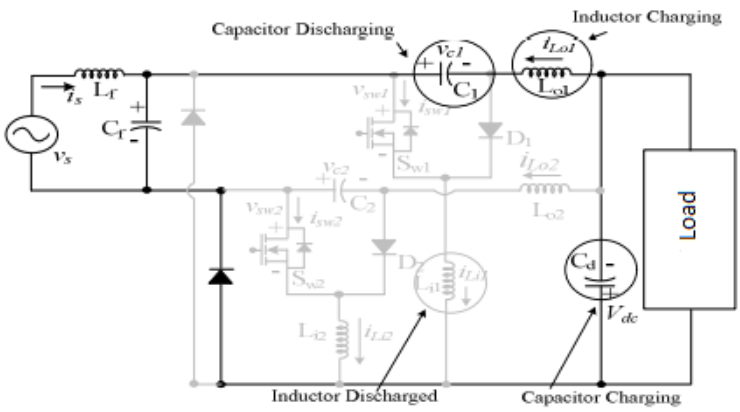


**Fig:2(c)**

***Mode 3:*** The converter is operating in the DCM in this case as the input inductor (Li1) is discharged and the current in Li1 changes to zero as seen in Fig. 2 (c). In this mode, the intermediate capacitor voltage (vC1) declines while the output inductor current (iLo1) increases.

## 3. DESIGN OF PFC-BASED LANDSMAN CONVERTER

The proposed PFC-based Landsman converter for 200v at output. The front-end Landsman-based PFR converter of 400 W is proposed. the dc link voltage is 200v and at mains supply voltage is (90 to 240v).

The input voltage is

$$V_s(t) = V_m \sin(\omega_L t) \quad (1)$$

$$= V_m \sin(2\pi f_L t) = 311 \sin(314\, t)$$

$Where, V_m$ *is the maximum supply voltage,* $\omega_L$ *and* $f_L$ *is the line frequency.*

The voltage appearing after is given as

$$V_{in} = \frac{2\sqrt{2}Vs}{\pi} \quad (2)$$

Duty ratio(D) is calculated by using buck boost converter formula

$$D = \frac{V_{dc}}{V_{in} + V_{dc}} \quad (3)$$

$$= \frac{200}{198+200} = 0.502$$

The output inductor is calculated for 20% of ripples at input current

$$L_0 = \frac{1}{\eta f}\left(\frac{V_s^2}{P_i}\right)\left(\frac{V_{dc}}{V_{in}+V_{dc}}\right) \quad (4)$$

Where fs is 20khz, Vs is 90v output voltage at dc main is 200v

$$L_0 = \frac{1}{\eta\, f_s}\left(\frac{V_{s\,min}{}^2}{P_{max}}\right)\left(\frac{V_{dc\,max}}{\sqrt{2}V_{s\,min}+V_{dc}}\right) \quad (5)$$

$$= \frac{1}{0.2 * 20000}\left(\frac{90^2}{400}\right)\left(\frac{200}{90\sqrt{2}+200}\right)$$

$$= 3.09\, mH$$

The ripple current is 20% of the output DC-link current. Hence the output side inductor (Lo) of 3 mH

The critical output side inductor ($L_{ic}$) is designed as

$$L_{ic} = \frac{V_{dc}\,D}{2I_{in}\,f_s} = \frac{R_{in}\,V_{dc}\,D}{2V_{in}\,f_s} = \left(\frac{V_s{}^2}{P_i}\right)\frac{V_{dc}}{2V_{in}\,f_s}\left(\frac{V_{dc}}{V_{in}+V_{dc}}\right) \quad (6)$$

The maximum current ripple in an inductor occurs at the maximum power and for minimum value of supply voltage ($V_{smin}$ = 90 V). Hence the output inductor is calculated at the peak value of source voltage ($V_{in} = \sqrt{2}\ V_{smin}$). The critical value for inductor corresponding to maximum DC-link voltage of 200 V (i.e., $V_{dcmax}$) is given as

$$L_{ic} = \left(\frac{V_{s\,min}{}^2}{P_{max}}\right)\frac{V_{dc\,max}}{2\sqrt{2}V_{s\,min}\,f_s}\left(\frac{V_{dc\,max}}{\sqrt{2}V_{s\,min}+V_{dc\,max}}\right) \quad (7)$$

$$= \left(\frac{90^2}{400}\right)\frac{200}{2\sqrt{2} * 90 * 20000}\left(\frac{200}{90\sqrt{2}+200}\right)$$

$$= 486\ \mu H$$

The value of intermediate capacitance is as

$$C_1 = \frac{V_{dc}\,D}{KV_{C_1}\,f_s\,R_L} = \frac{V_{dc}}{K\{V_{in}+V_{dc}\}\,f_s\left(\frac{V_s{}^2}{P_i}\right)}\left(\frac{V_{dc}}{V_{in}+V_{dc}}\right)$$

$$= \frac{P_i}{K\,f_s\{V_{in}+V_{dc}\}^2} \quad (8)$$

K stands for the permissible ripple voltage over the intermediate capacitor. The value of the intermediate capacitor is calculated using the maximum supply voltage (Vsmax = 270 V) and the maximum DC voltage (Vdcmax), which correspond to the maximum ripple voltage in C1 as follows:

$$C_1 = \frac{P_{max}}{K\,f_s\{\sqrt{2}V_{s\,max}+V_{dc\,max}\}^2} \quad (9)$$

$$= \frac{400}{0.15 * 20000\{270\sqrt{2}+200\}^2} = 393.8\, nF$$

Where k is 15% of ripples

The DC capacitor's numerical value is created as [4]

$$C_d = \frac{I_{dc}}{2\,\omega\,\Delta V_{dc}} = \frac{\left(P_i/V_{dc}\right)}{2\,\omega\,\delta V_{dc}} = \frac{P_i}{2\,\omega\,\delta\,V_{dc}^2} \quad (10)$$

At the lowest DC voltage, the DC capacitor's worst-case scenario materializes.

$$C_d = \frac{P_{min}}{2\,\omega\,\delta\,V_{dc\,min}^2} = \frac{100}{2*314*0.03*50^2} = 2123.1\ \mu F$$

where δ represents the acceptable ripple at DC voltage which is considered as 3% of $V_{dc}$ and $P_{min}$ represents the minimum power referring to minimum DC voltage for $V_{dcmin}$. Hence the DC capacitor of 2200 µF is selected for the proposed application.

A low-pass filter [ 9] is also designed for suppressing high order switching current reflection at the supply system. The highest value for filter capacitance ($C_{f\,max}$) is specified by

$$C_{f\,max} = \frac{I_{s\_peak}}{\omega_L\,V_{s\_peak}}\tan(\theta) = \frac{(\sqrt{2}\ P_{max}/V_s)}{\omega_L\,V_s}\tan(\theta) \quad (11)$$

$$= \frac{\left(\frac{400\sqrt{2}}{200}\right)}{314 * 220}\tan(1°) = 649.nF$$

where $I_{s\_peak}$ and $V_{s\_peak}$ are the peak values of supply voltage and θ is the angle between the fundamental component of voltage and supply current which is of the order of 1°.

The source impedance, which ranges from 3–5% of the base impedance, is taken into account while designing the filter inductor (Lf). Furthermore, the developed filter's cut-off frequency (fc) is chosen so that fL fc fsw; thus, it is chosen as fsw/10 as 2000 Hz. Therefore, the necessary inductance value (Lf) is determined as

$$L_f = L_{req} + L_s \rightarrow \frac{1}{4\,\pi^2\,f_c^2\,C_f} = L_{req} + \left(\frac{1}{\omega_L}\right)\left(\frac{V_s{}^2}{P_o}\right) \quad (12)$$

$$L_{req} = \frac{1}{4\,\pi^2 * (2000)^2 * 330 * 10^{-9}} - 0.04\left(\frac{1}{314}\right)\left(\frac{220^2}{400}\right) = 3.77mH \quad (13)$$

Therefore, the filter inductor (Lf) of 3.7 mH is selected.

## 4. PROPOSED SIMULATION MODEL

The proposed method in the below simulation circuit is connected according to the circuit diagram i.e., Fig 1. The input voltage of the circuit is 198 V AC and an output is 198 V DC. To reduce the harmonics, present in the input side, filters i.e., $3.77e^{-3}$ H and $580e^{-9}$ F are added. The converter values of the components are taken from the design calculation of PFC based landsman converter. The two MOSFETs are triggered by using PWM signal. Resistive load is added across the output DC link capacitor. The output voltage is regulated by controlling the duty cycle of the converter using a feedback control loop.

**Fig: 4 Simulation circuit**

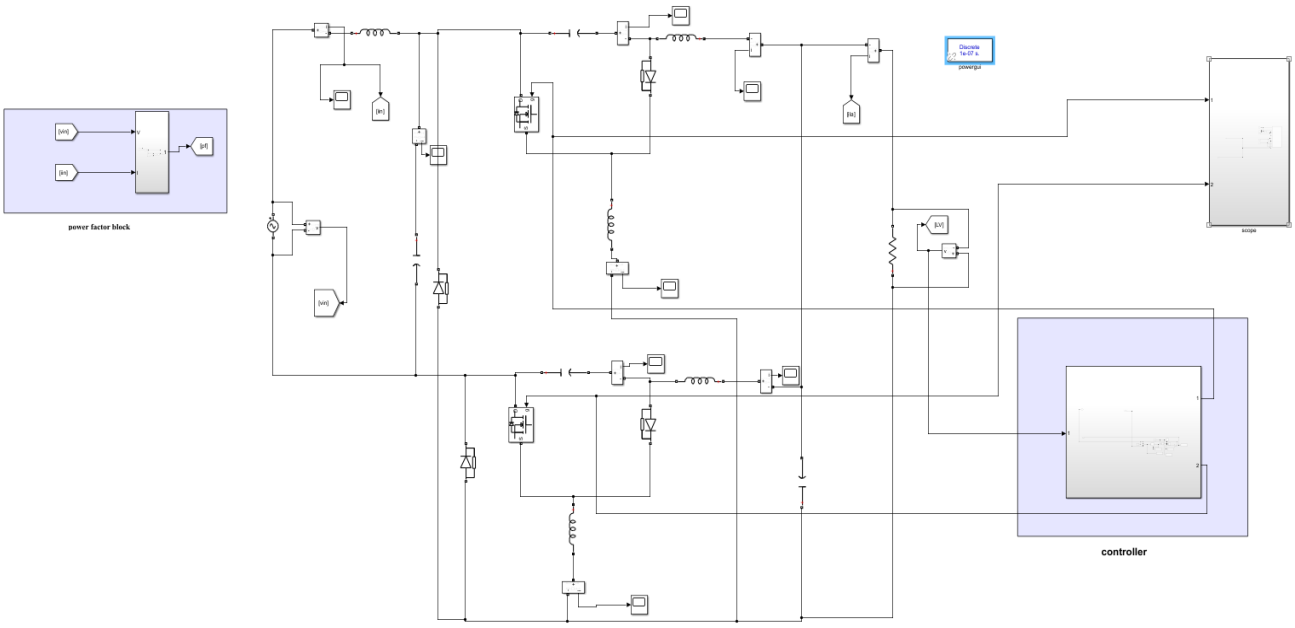


## 4.1POWER FACTOR CALCULATION BLOCK IN SIMULATION:

The power factor is the ratio of real power (measured in watts) to apparent power (measured in volt-amperes). In an ideal system, the power factor is 1. Capacitors are devices that store electrical energy and release it back to the system when needed. Adding capacitors to an electrical system can help improve the power factor.

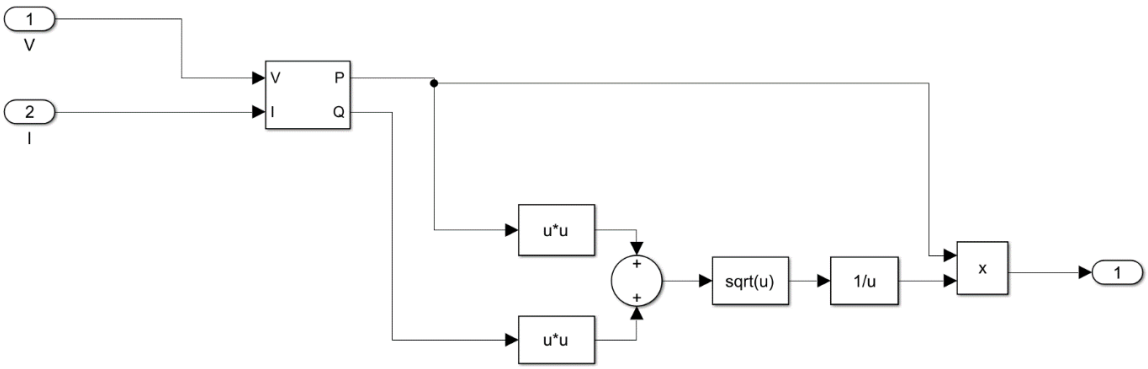


**Fig:4.1 Power Factor**

## 5.WAVEFORMS

Below the wave forms are for closed loop by starting with supply Voltage, Input current, Power factor, Output voltage, output current, power at the end.

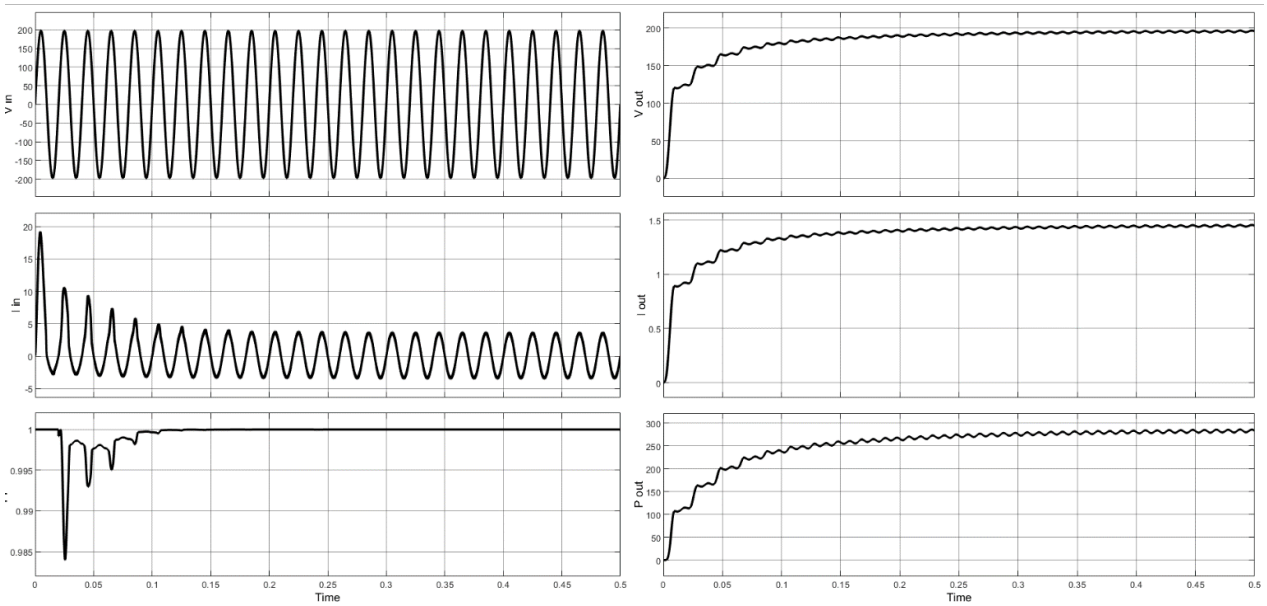


**Fig:6 closed loop waveforms**

## 6.COMPARISON TABLE

Table 1: All about comparison between open loop and closed loop of proposed simulation

| Parameters | Open loop | Closed loop |
|---|---|---|
| Input voltage peak to peak | 198 V | 198 V |
| Input current peak to peak | 4.5 A | 4.5 A |
| Power factor | 0.99 | 1 |
| Output voltage | 196 V | 198 V |
| Output current | 1.45 A | 1.484 A |
| THD | 3.87% | 4.09% |

## 7.CONCLUSION

This PFC based landsman converter is deigned is proposed to drive low power household appliances. The simulation is designed for low voltage AC input of 198v in the peak to peak and output voltage of 198v DC. by the observation of simulation, the input side PF is boosted near to unity with the input harmonics of the 4.09% in current. In detailed the values are shown in comparison table.

## REFERENCES

[1] Limits for Harmonic Current Emissions (Equipment input current ≤16 A per phase), International Standard IEC 61000-3-2, 2000.
[2] P.K. Singh, B. Singh, V. Bist, A. Chandra and K. Al-Haddad, "A single sensor based bridgeless landsman PFC converter fed BLDC motor drive," *Industry Applications Society Annual Meeting, 2015 IEEE,* Addison, TX, 2015
[3] P.K. Singh, B. Singh and V. Bist, "Brushless DC motor drive with power factor regulation using Landsman", *IET Power Electronics*.
[4] B. Singh and V. Bist, "A BL-CSC Converter fed BLDC Motor Drive with Power Factor Correction", IEEE Trans. on Ind. Electron. vol.62, no.1, pp.172-183, 2015.
[5] B. W. Williams, "Generation and Analysis of Canonical Switching Cell DC-to-DC Converters," IEEE Trans. Ind. Electron, vol. 61, no. 1, pp. 329–346, Jan 2014.
[6] E. E. Landsman, "A Unifying Derivation of Switching DC-DC Converter Topologies", Proc. of PESC '79 Record, San Diego, Calif., Jun. 18-22, 1979, pp.239-243.
[7] B. W. Williams, "Basic DC-to-DC Converters," IEEE Trans. Power Electron., vol.23, no.1, pp.387-401, Jan. 2008.
[8] B. W. Williams, "DC-to-DC Converters with Continuous Input and Output Power," IEEE Trans. Power Electron., vol.28, no.5, pp.2307- 2316, May 2013.
[9] V. Vlatkovic, D. Borojevic, and F. C. Lee, "Input filter design for power factor correction circuits," IEEE Trans. Power Electron., vol. 11, no. 1, pp.199–205, Jan. 1996.