IoT- Enabled Real-Time Smart Energy Meter

Himanshu Malviya
Student
Dept. of EED
Medi-caps university

Vaishnavi Shukla
Student
Dept. of EED
Medi-caps University

Dr. Santosh S. Raghuwanshi
Assistant Professor
Dept. of EED
Medi-caps University

***Abstract*— The proposed system for a smart energy meter using IoT, NodeMCU, and PZEM-004T aims to overcome the lack of technical knowledge and manual readings associated with traditional energy meters. This system enables users to remotely access energy consumption data and related parameters such as voltage, current, power, power factor, and frequency. The system utilizes PZEM-004T sensors to measure parameters, and NodeMCU to transmit data to the server. The system can be controlled via a mobile application and web application, enabling users to efficiently monitor and manage their energy consumption. Overall, the proposed system provides a user-friendly and efficient solution to real-time energy usage monitoring and control.**

Keywords- IoT, PZEM-004T, Node MCU (ESP 8266)

INTRODUCTION

Electricity has become an essential need for humans in various domains such as domestic, industrial, and agricultural purposes. However, the existing system for measuring energy consumption is time-consuming and inefficient. To overcome these issues, IoT-based smart energy meters have been developed which can reduce the need for manpower, enable energy monitoring, load management, and prevent power theft. Smart meters function in a similar manner to normal meters but have the added benefits of automation and remote monitoring. Smart energy meters are a new generation of devices that are designed to help consumers and utility companies better manage their energy usage. These meters use the Internet of Things (IoT) technology to provide real-time data on energy consumption, which can be used to optimize energy usage and reduce costs. With smart energy meters, consumers can monitor their energy usage in real-time, set alerts for high usage, and even control their appliances remotely.

Smart energy meters are becoming increasingly popular as they offer an efficient and cost-effective way to monitor energy usage. The objective of our proposed system is to monitor the energy consumption and manage them accordingly so that the user can overcome high bill amount.

In this context, Node MCU and PZEM-004T are two popular devices that can be used to build smart energy meters. Node MCU is an open-source IoT platform that allows for easy integration with various sensors and devices. On the other hand, PZEM-004T is a module that can measure various parameters of AC power, including voltage, current, power, power factor, frequency and energy consumption.

By integrating Node MCU with PZEM-004T, developers can build smart energy meters that can measure the energy consumption of individual appliances or entire households. These meters can be connected to a cloud server for real-time monitoring and analysis, allowing users to optimize their energy usage and reduce their carbon footprint. In addition, PZEM-004T can be used to build energy monitoring systems for industrial applications, enabling companies to optimize their energy usage and reduce costs. Overall, IoT-based smart energy meters using Node MCU and PZEM-004T offer a powerful tool to monitor energy usage and contribute to a more sustainable future.

Smart energy meters using IoT technology have limitations such as security concerns, dependence on internet connectivity, high cost, privacy concerns, technical issues, and limited compatibility with older appliances and devices.

I. ENERGY METER SYSTEM

Block diagram

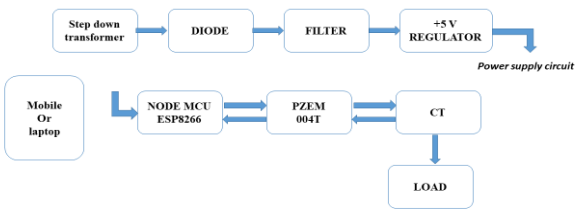

Fig 1: Block Diagram of Smart Energy Meter

In today's world, electricity is an essential part of our daily lives and plays a significant role in almost every aspect of modern society. As a result, monitoring and controlling power consumption has become increasingly important in all fields. Researchers are continuously striving to develop new technologies to automate household items, machinery, detect power theft, control voltages, and optimize energy efficiency using smart meters, sensors, microcontrollers, and the Internet of Things. However, many of these solutions overlook the issue of high energy costs, which can often exceed our monthly budgets and lead to financial strain. To address this problem, an efficient monitoring and controlling system is needed, and the proposed system aims to provide just that. By using sensors and relays, users can choose their preferred tariff based on their monthly budget and adjust their energy consumption accordingly.
The proposed system offers an intuitive and user-friendly approach to monitor energy usage in real-time, with data collected by electronic devices and transmitted to a server using NodeMCU technology. Overall, the proposed system provides an effective solution to help users control their energy usage and save money on their monthly bills.

The main components required for the system are as follows:
1. PZEM 004T multifunctional meter
2. Node MCU
3. 0-12V, 800mA Transformer
4. 1N4007X4 Diode
5. Electrolytic Capacitor

II. HARDWARE COMPONENTS

A. PZEM 004T

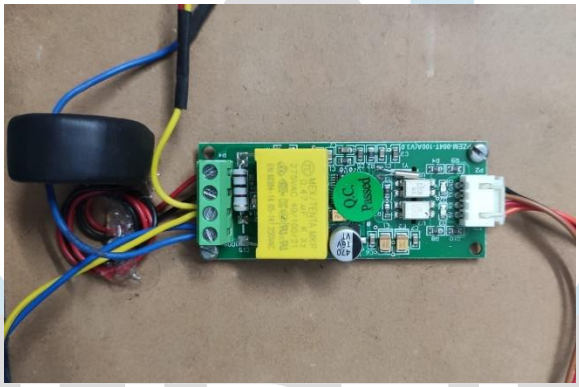

Fig 2: PZEM 004T

The PZEM 004T multifunction AC power monitor is a widely used smart meter related to electrical consumption measurement. It is particularly useful for measuring voltage, current, power, and energy. This smart meter features a serial TTL interface and includes an overload detection function. The primary component of the PZEM 004T module is the SD3004 chip.
The PZEM-004T 100 Ampere version utilizes a split-core Current Transformer model. This configuration offers an advantage in terms of ease of use as it can be installed directly onto an existing power network cable without the need to disconnect the cable.

B. Node MCU

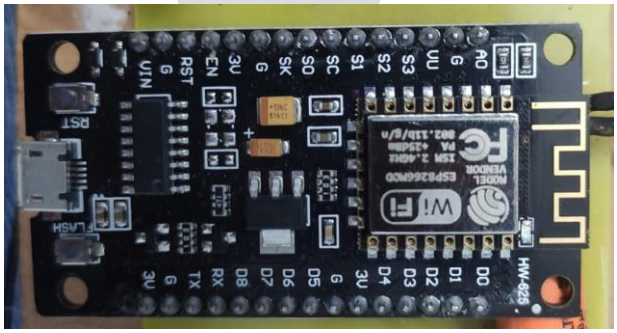

Fig 3: Node MCU, ESP 8266 Module

Node MCU is an open-source software and hardware development environment that can be programmed using the Arduino IDE. Unlike Arduino, which does not have inbuilt wireless network support, developers have to add a Wi-Fi module to the board and write code to access the wireless network. Node MCU, on the other hand, is a microcontroller that has built-in support for Wi-Fi connectivity, making it easier to develop IoT applications. It is an inexpensive chip ESP8266 that provides low-level control for specific hardware.

SOFTWARE REQUIREMENT

A. Arduino IDE

Arduino IDE plays a crucial role in programming the Node MCU microcontroller. The IDE provides a user-friendly interface for developers to write, compile, and upload code to the Node MCU board. It supports the C++ programming language and provides numerous libraries that can be used to control various hardware components. The code is written and tested on the IDE, and then uploaded to the Node MCU board to control the PZEM-004T sensor and transmit data to the server. Thus, the Arduino IDE is an essential tool in the development and implementation of the IoT-based smart energy meter system.

B. Express PCB

Express PCB can be used to design the PCB for an IoT-based smart energy meter. To design the PCB for a smart energy meter, you would first need to create a schematic of the circuit, which includes the components that make up the meter and how they are connected. This can be done using Express PCB's schematic capture tool.
Once the schematic is complete, you can use Express PCB's PCB layout tool to design the actual physical layout of the circuit on the PCB. This involves placing the components on the board and routing the connections between them. It is important to ensure that the layout is optimized for the specific requirements of the smart energy meter, such as minimizing interference between components and ensuring that the board fits within the physical constraints of the device.

METHODOLOGY

The methodology of an IoT-based smart energy meter using Node MCU and PZEM004T can be described as follows:

1. Requirement Analysis: In this step, the requirements of the project are analysed, and the objectives and scope of the project are defined. The hardware and software requirements are determined.
2. Hardware Setup: The first step involves the hardware setup of the smart energy meter. This includes connecting the PZEM004T module to the Node MCU, which will be used to measure various parameters such as voltage, current, power, power factor and frequency. The Node MCU is also connected to a Wi-Fi network for internet connectivity.
3. Data Collection: The PZEM004T module will collect data from the energy meter and send it to the Node MCU. The Node MCU will then process this data and send it to a cloud-based server using a Wi-Fi connection. The server will store this data in a database and make it available for analysis.
4. User Interface: A user interface is developed using a mobile, this interface will allow the user to view their energy consumption in real-time.
5. Data Analysis: The data collected from the energy meter is analysed to identify patterns in energy consumption and to provide insights that can help users reduce their energy consumption.

Overall, the methodology involves a systematic approach to developing an IoT-based energy meter using NodeMCU and PZEM004T, ensuring that the system meets the requirements and objectives of the project, and it can help users monitor and manage their energy consumption efficiently.

WORKING

The PZEM-004T is a power monitoring module that can measure various parameters of. Circuit, such as voltage, current, power, energy, and frequency. It is connected to the electrical circuit that is being monitored, and it outputs the measured parameters as digital signals. The NodeMCU is a Wi-Fi enabled microcontroller board that can connect to the internet and send data to a cloud-based service or a local server. It is connected to the PZEM-004T and reads the measured parameters from it.
The NodeMCU uses its Wi-Fi connectivity to send the measured parameters to a cloud-based service or a local server. This can be done using protocols such as MQTT or HTTP.
The cloud-based service or local server receives the data sent by the NodeMCU and stores it in a database. The data can then be accessed and analyzed to gain insights into the energy consumption of the circuit being monitored. The data can also be used to control the electrical circuit remotely. For example, the NodeMCU can be programmed to turn off a device or appliance when it is not in use, or to reduce its power consumption during times of peak demand.

In summary, an IoT-based smart energy meter using NodeMCU and PZEM-004T works by measuring the parameters of an electrical circuit using the PZEM-004T, sending the data to a cloud-based service or local server using the NodeMCU, and

analyzing the data to gain insights into energy consumption and control the circuit remotely.

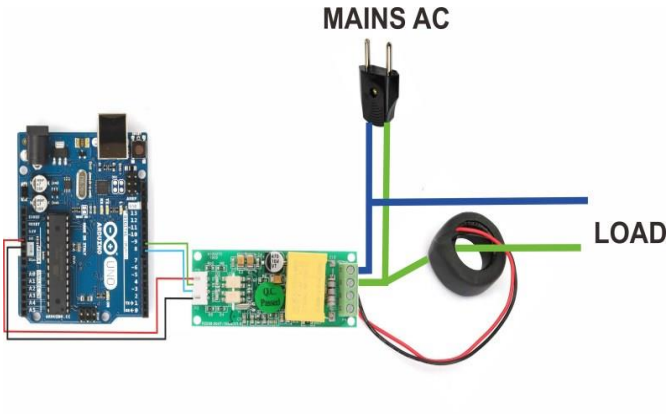

Fig 4: Working principle of smart energy meter

LLOAD (Watts)	Voltage (Volts)	Current (Amperes)	Power Factor	Power (Watts)	Frequ-ency (Hz)
0 W	240.40	0.00	0.00	0.00	50.00
9 W	241.50	0.09	0.97	10.30	50.00
15 W	238.10	0.07	1.00	16.00	50.00
18 W	241.50	0.08	0.99	20.10	50.00
20 W	240.00	0.09	0.99	21.20	50.00
24 W	241.50	0.11	0.99	26.60	50.00

Table 1: Results for parameters for different loads

RESULT

The proposed smart energy meter system using IoT, NodeMCU, and PZEM-004T addresses the challenges associated with manual readings and limited technical knowledge in traditional energy meters. This system allows for remote access to energy consumption data and related parameters such as voltage, current, power, power factor, and frequency. The PZEM-004T sensors are utilized for measuring these parameters and NodeMCU transmits the data to the server. The system can be easily controlled through mobile and web applications, providing users with an efficient way to monitor and manage their energy consumption. In conclusion, this proposed system offers an effective and user-friendly solution for real-time energy monitoring and control.

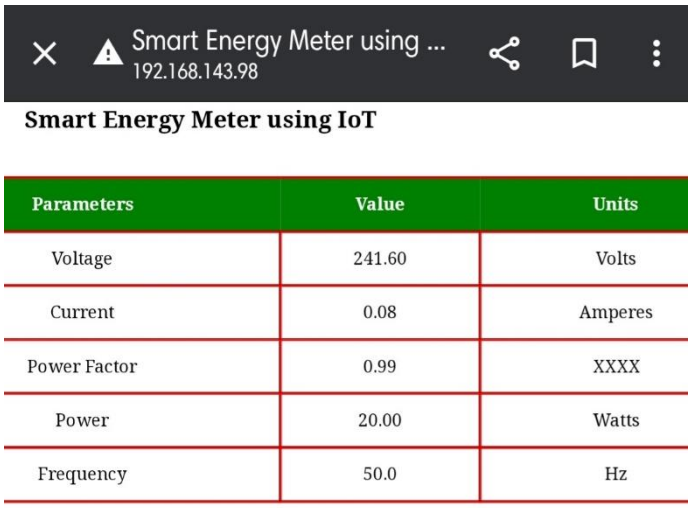

Parameters	Value	Units
Voltage	241.60	Volts
Current	0.08	Amperes
Power Factor	0.99	XXXX
Power	20.00	Watts
Frequency	50.0	Hz

Fig 5: Displayed result of smart energy meter

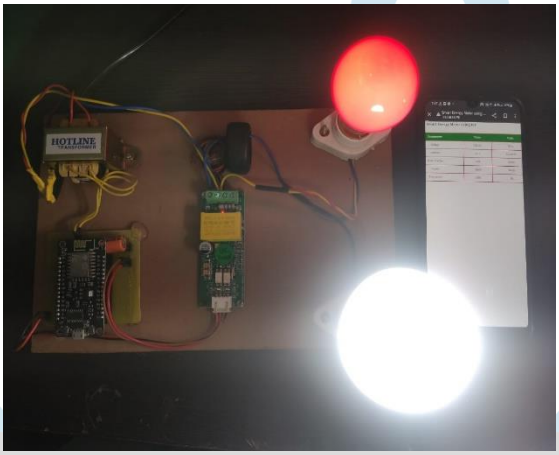

Fig 6: Working Model for smart energy meter

CONCLUSION

The proposed system for a smart energy meter using IoT, NodeMCU, and PZEM-004T aims to provide a user-friendly and efficient solution to real-time energy usage monitoring and control. The system uses PZEM-004T sensors to measure parameters and NodeMCU to transmit data to the server. The system can be controlled via a mobile application and web application, enabling users to efficiently monitor and manage their energy consumption. The proposed system offers an intuitive and user-friendly approach to monitor energy usage in real-time, with data collected by electronic devices and transmitted to a server using NodeMCU technology. The system aims to help users control their energy usage and save money on their monthly bills. The hardware components required for the system include PZEM 004T multifunctional meter, Node MCU, 0-12V, 800mA Transformer, 1N4007X4 Diode, and Electrolytic Capacitor. Overall, IoT-based smart energy meters using Node MCU and PZEM-004T offer a powerful tool to monitor energy usage and contribute to a more sustainable future

REFERENCES

[1.] Dr. Sabu George , Gopika B *"IoT Based Smart Energy Management System using Pzem-004t Sensor & Node MCU"*, International Journal of Engineering Research & Technology (IJERT) ISSN: 2278-0181 Published by, www.ijert.org ICCIDT - 2021 Conference Proceedings.

[2.] PZEM-004T V3.0 User Manual

[3.] *"An internet of things-based smart energy meter for monitoring device-level consumption of energy",* Shishir Muralidhara , Niharika Hegde, Rekha PM JSS Academy of Technical Education, Bangalore, India.

[4.] Tekler, Z.D.; Low, R.; Yuen, C.; Blessing, L. Plug-Mate: An IoT-based occupancy-driven plug load management system in smart buildings. Build. Environ. 2022, 223, 109472.

[5.] Veloso, A.F.d.S.; de Moura, M.C.L.; Mendes, D.L.d.S.; Junior, J.V.R.; Rabêlo, R.A.L.; Rodrigues, J.J.P.C. Towards Sustainability using an Edge-Fog-Cloud Architecture for Demand-Side Management. In Proceedings of the 2021 IEEE

International Conference on Systems, Man, and Cybernetics (SMC), Melbourne, Australia, 17–20 October 2021; pp. 1731–1736.

[6.] Tekler, Z.D.; Low, R.; Blessing, L. User perceptions on the adoption of smart energy management systems in the workplace: Design and policy implications. Energy Res. Soc. Sci. 2022, 88, 102505. [CrossRef]

[7.] Ida Bagus Gede Purwania, I Nyoman Satya Kumara, and Made Sudarma," Application of IoT-Based System for Monitoring Energy Consumption", International Journal of Engineering and Emerging Technology, Vol.5, No.2, December 2020.

[8.] Pierleoni, P.; Concetti, R.; Belli, A.; Palma, L. Amazon, Google and Microsoft Solutions for IoT: Architectures and a Performance Comparison. IEEE Access 2020, 8, 5455–5470.

[9.] Mahapatra, B.; Nayyar, A. Home energy management system (HEMS): Concept, architecture, infrastructure, challenges and energy management schemes. Energy Syst. 2022, 13, 643–669.

[10.] Li, W.; Yigitcanlar, T.; Erol, I.; Liu, A. Motivations, barriers and risks of smart home adoption: From systematic literature review to conceptual framework. Energy Res. Soc. Sci. 2021, 80, 102211.

[11.] Leitão, J.; Gil, P.; Ribeiro, B.; Cardoso, A. A Survey on Home Energy Management. IEEE Access 2020, 8, 5699–5722.

[12.] Ahmad, T.; Zhang, D. Using the Internet of things in smart energy systems and networks. Sustain. Cities Soc. 2021, 68, 102783.

[13.] Bhuiyan, M.N.; Rahman, M.M.; Billah, M.M.; Saha, D. Internet of Things (IoT): A Review of Its Enabling Technologies in Healthcare Applications, Standards Protocols, Security, and Market Opportunities. IEEE Internet Things J. 2021, 8, 10474–10498.