Power Quality Improvement PV based Using D-STATCOM

R. Thejeswini [1], l. Vennela [2], CV. Swaroop Kumar [3], S. Sreemanth Reddy [4], B. Srinivasulu [5], Dr. V B. Thurai Raaj [6],

UG Students [1 2 3 4 5], Professor [6],
Department of Electrical and Electronics,
Madanapalle Institute of Technology & Science, Madanapalle, 517325, India

Abstract— **This paper presents power quality improvement technique in the presence of D-STATCOM (distribution static compensator). Power quality is major concern for the recent development in electric utility. The purpose of D-STATCOM is to reduce the harmonics of current sources, compensate the reactive currents and compensate the ground currents in the point of common coupled (PCC). D-STATCOM is the one of the power quality compensating devices which is used in the generation of electrical energy.it the rectifies the power quality such as voltage sag and voltage swell which occurs in high voltage power transmission lines.it is the high economically effective in transmission lines and safer to in end-user equipment's.**

***Index Terms*—PI CONTROLLER, INVERTER, SIMULATION METHOD, LCL FILTER, SPWM.**

I. INTRODUCTION (HEADING 1)

Nowadays, the most common power quality issues like voltage sag, Voltage swells, low power factor and harmonics distortions influences highly. Mostly, these issues are groomed due to the nonlinear behaviour of the electrical loads. The growth of electronics utilities becomes the source of introducing low order harmonics since; they use the nonlinear loads for power conditioning. Few of these non-linear loads are televisions, computers, printers, etc. Therefore, the increase in the use of such equipment becomes the reason of the high-power consumption and low power density. Besides, the market demands a power source of high-power density with a sensible price change. Hence, DSTATCOM with suitable filtering method has been widely implemented in localized distributed system to limit the influence of lower order harmonics with maintaining the desired input unity power factor.The DSTATCOM is a custom power device that is used to remove and balance harmonics from the source current as well as provide reactive power compensation to improve power factor or regulate the load bus voltage. The DSTATCOM's main component is a power voltage source converter based on high-power technologies. The figure 1 shows the single line diagram of the DSTATCOM connected to the grid in the PCC the single line diagram consists of the DC voltage source behind self-commutated inverters using IGBT controller and coupling transformer.

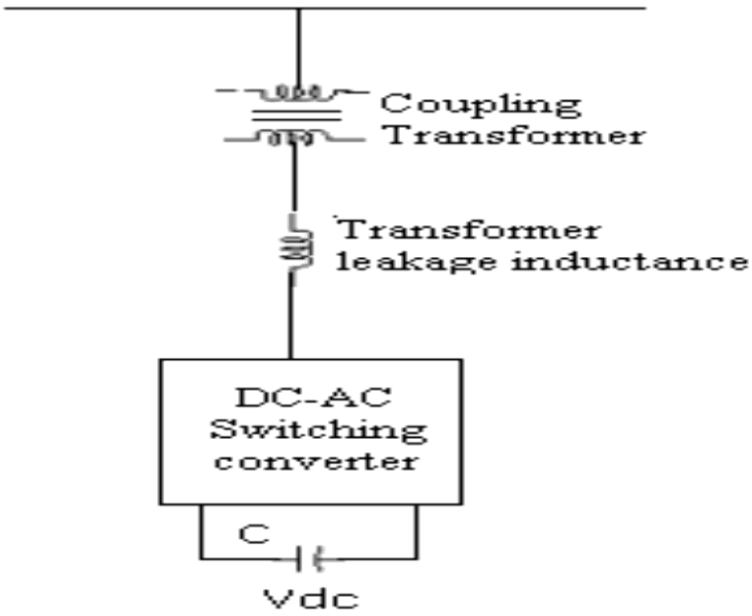

The main focus of the placing the DSTATCOM is that we are having the harmonics problem that is occurring in the system that are having the great loss to the system we have to decrease the THD is to be reduces and make the system in the good performance so that we are planning the DSTATCOM in the middle of the distribution system the importance of the DSTATCOM is to be reduces in the chapter 2 and chapter3 in that chapters the behaviour of the DSTATCOM over different filters are can be seen. The DSTATCOM is to be obtaining high power factor. And also, the DSTATCOMA can be improved to obtained high quality of power which is essential for the distribution system to satisfy IEEE std.519, IEC 61000-3-2.

The figures1.1 has the Vdc which is connected to the VSI the DC link is the supplying the voltage to the VSI. By the supplying to the power to the inverter the DC link is going to the discharged at some time after this leads to the imbalance of the

system so that we are going to solve this unbalance the problem by the introducing the continuous flow of the energy. So that we are able to be give noninterest to the current to the loads.

By introducing a renewable energy source in front of the VSI, we can cause the system to operate flawlessly, allowing us to select one of the energy resources to the inverter as the system's input. By transferring solar energy to the inverter for improved performance, we are going to attach photovoltaic modules to the inverter and check the THD value as shown in chapter4 can be shown the difference in the performance of the without the PV panel and with the PV panel can be clearly absorbed in the chapter3&4 by seeing the THD values.

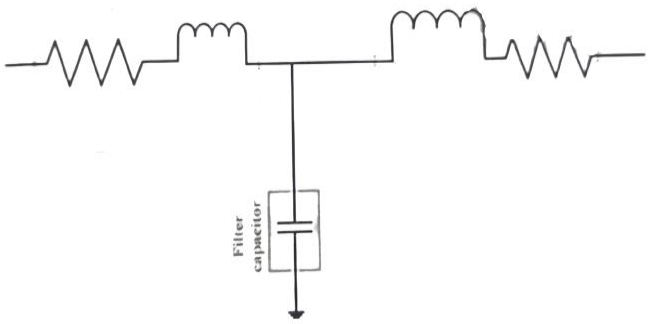

1.7 Block diagram of the Active filter

The main focus of the placing the DSTATCOM is that we are having the harmonics problem that is occurring in the system that are having the great loss to the system we have to decrease the THD is to be reduces and make the system in the good performance so that we are planning the DSTATCOM in the middle of the distribution system the importance of the DSTATCOM is to be reduces in the chapter 2 and chapter3 in that chapters the behavior of the DSTATCOM over different filters are can be seen. The DSTATCOM is to be obtaining high power factor. And also, the DSTATCOMA can be improved to obtained high quality of power which is essential for the distribution system to satisfy IEEE

The figures1.1 has the Vdc which is connected to the VSI the DC link is the supplying the voltage to the VSI. By the supplying to the power to the inverter the DC link is going to the discharged at some time after this leads to the imbalance of the system so that we are going to solve this unbalance the problem by the introducing the continuous flow of the energy. So that we are able to be give noninterest to the current to the loads.

II. Control Technique:

To smooth the output current from a VSI, a high-order LCL filter is commonly used instead of a conventional L-filter. Because of the overall weight and size reduction of the components, the LCL filter achieves higher attenuation while saving money. Because they reduce the amount of current distortion injected into the utility grid, LCL filters have been used in grid-connected inverters and pulse-width modulated active rectifiers. By using small values of inductors and capacitors, good performance can be obtained in the range of power levels up to hundreds of KW. Higher harmonics attenuation of the LCL filter allows for lower switching frequencies to be used or meets harmonics constructions defined by standar

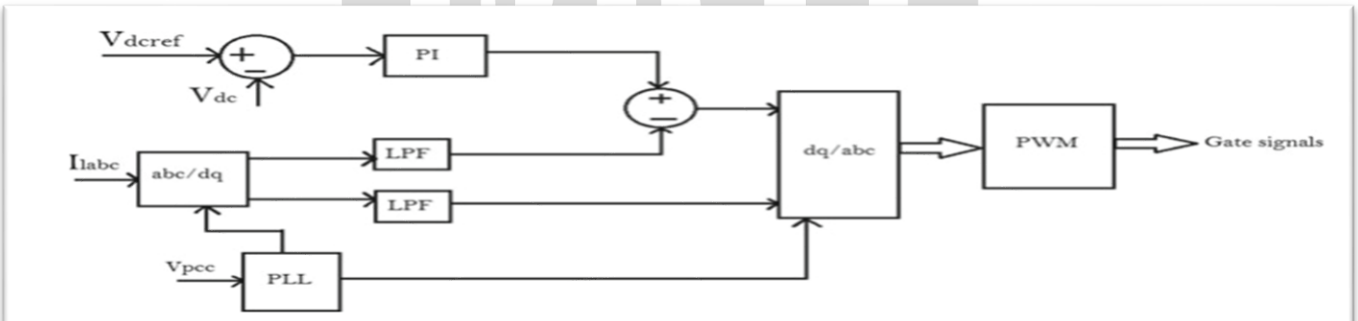

Fig. 2 Block diagram of proposed control algorithm

ds such as IEEE-519 and IEEE-1547. However,

III. Systems studies with PI regulators:

According to the design procedure discussed in the chapter 1 the obtained parameter of Lf1, Cf, Lf2 of LCL filter are presented in the block diagram in the chapter 1. Here we are arranging the values of the parameters according to the system requiring. The objective of the DSTATCOM is to compensate up to 19th harmonics (n=19) in three phase 12.5kva load, 400v, 50HZ system. The maximum current rating of DSTATCOM is taken as 25A (peak).

PROPOSED METHOD:

Table: System Parameters:

Parameters	Value
AC source voltage and frequency	Vs = 400 v, 50HZ
Line impedance	Ls=40mH, Rs=1.57
Nonlinear load	Rd=125, Ld=30mH
Power converter	IGBT
Filter Parameters	L Filter L=15Mh LC Filter L=8Mh, C=2.5micF LCL Filter L1=4Mh,L2=2m,C=2microF
DC link	Vdc=550v, C=3300micF

IV. PROPOSED SIMULATION MODEL

The PI-controller is used to eliminate the steady state error of the dc-component and maintains the dc-capacitance voltage of the VSI. The proportional and integral gains determine the dynamic response and settling time of the DC voltage respectively. To minimize the inverter losses by preserving the dc-voltage constant or within limits, the required current is added to the positive sequence fundamental frequency active components of the d q current, The desired reference current is calculated from id iq rotating frame using inverse transformation.

Fig 2.2: Block diagram of the conventional –SFR method

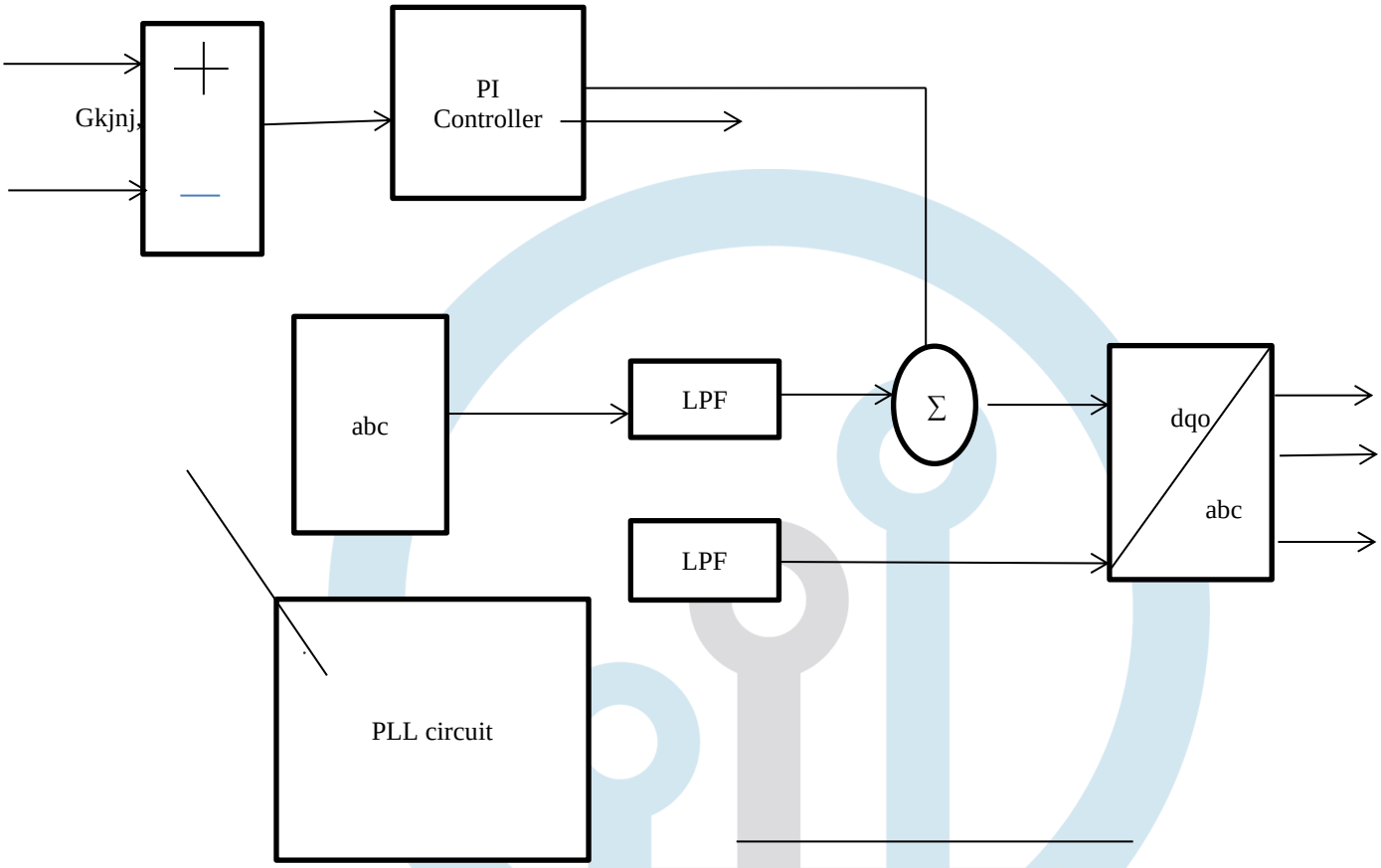

METHODOLOGY: MATLAB SIMULINK

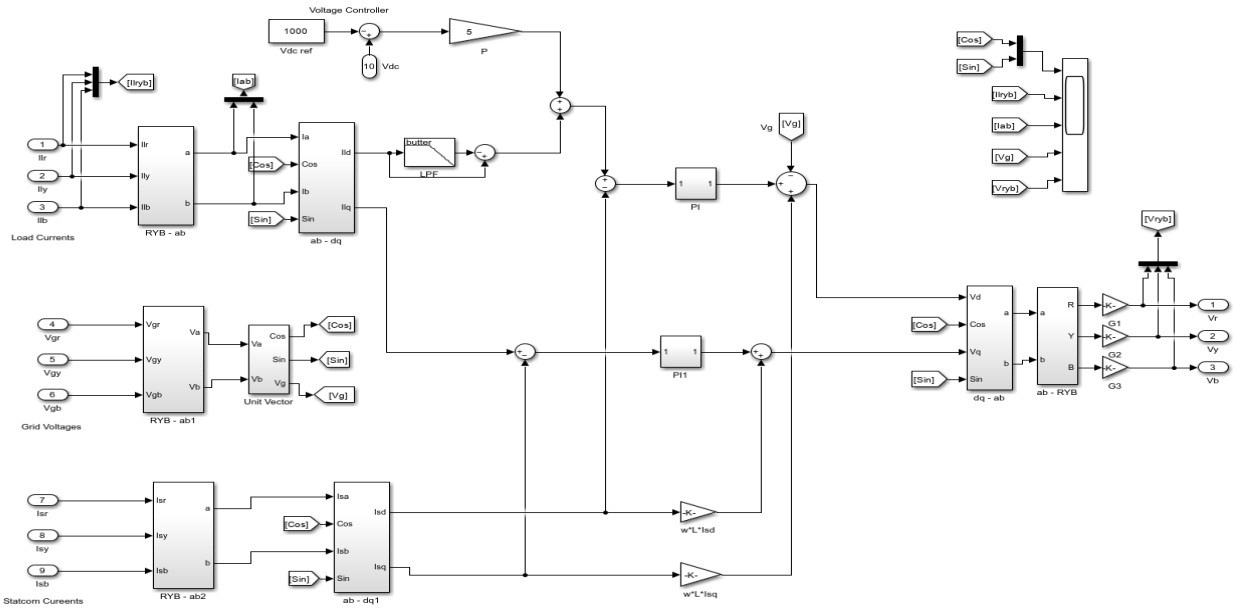

C+ontrol Technique:

To smooth the output current from a VSI, a high-order LCL filter is commonly used instead of a conventional L-filter. Because of the overall weight and size reduction of the components, the LCL filter achieves higher attenuation while saving money. Because they reduce the amount of current distortion injected into the utility grid, LCL filters have been used in grid-connected inverters

and pulse-width modulated active rectifiers. By using small values of inductors and capacitors, good performance can be obtained in the range of power levels up to hundreds of KW. Higher harmonics attenuation of the LCL filter allows for lower switching frequencies to be used or meets harmonics constructions defined by standards such as IEEE-519 and IEEE-1547. However,

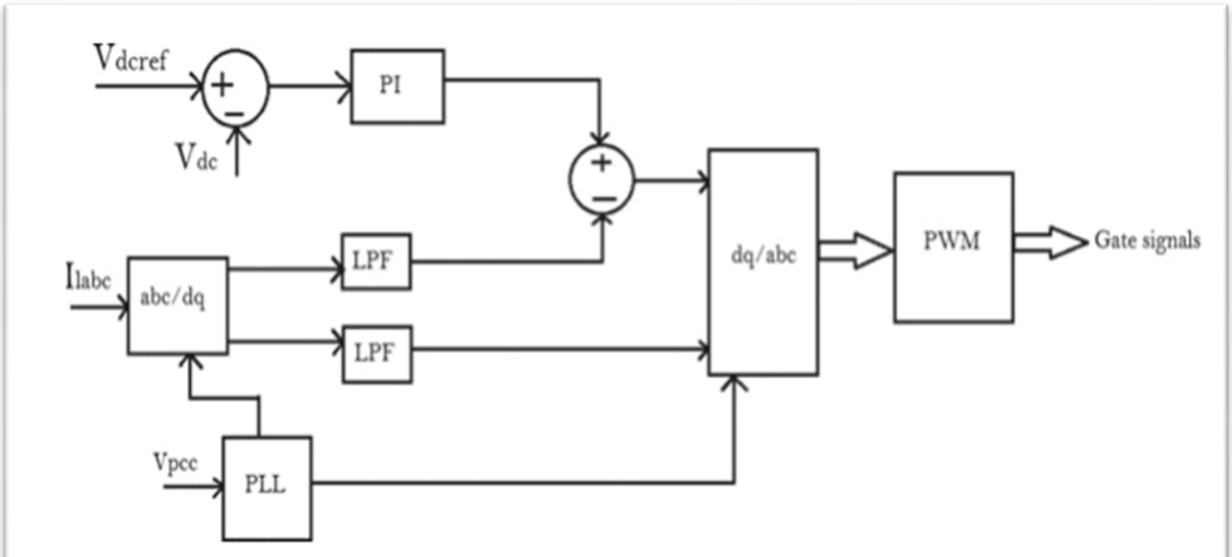

Fig. 2 Block diagram of proposed control algorithm

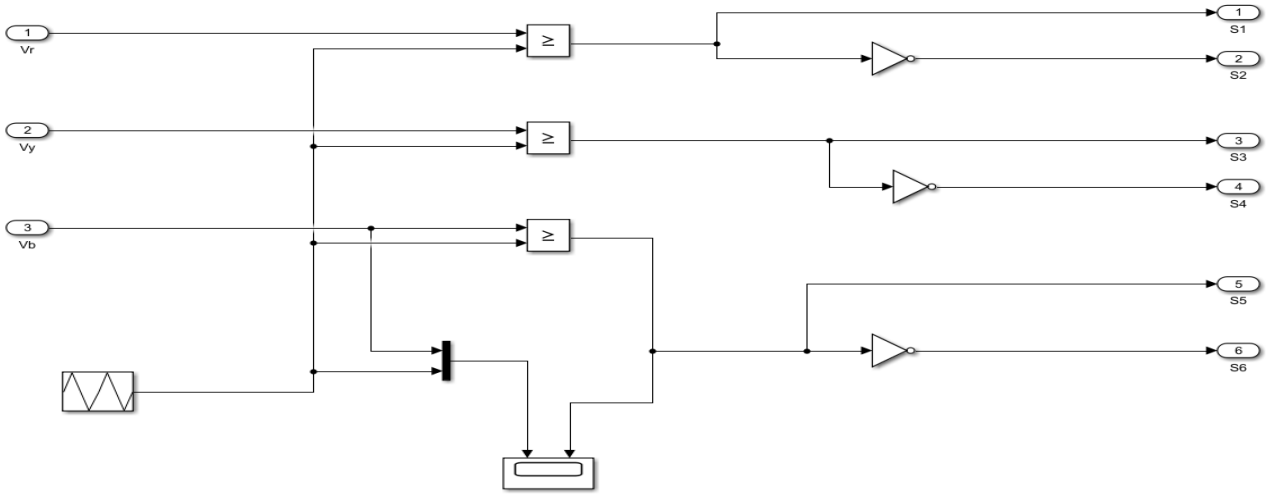

Systems studies with PI regulators:

According to the design procedure discussed in the chapter 1 the obtained parameter of Lf1, Cf, Lf2 of LCL filter are presented in the block diagram in the chapter 1. Here we are arranging the values of the parameters according to the system requiring. The objective of the DSTATCOM is to compensate up to 19th harmonics (n=19) in three phase 12.5kva load, 400v, 50HZ system. The maximum current rating of DSTATCOM is taken as 25A (peak).

V. RESULTS:

A high-order LCL filter is commonly used in place of a conventional L-filter to smooth the output current from a VSI. The LCL filter achieves higher attenuation while saving money due to the overall weight and size reduction of the components. LCL filters have been used in grid-connected inverters and pulse-width modulated active rectifiers because they reduce the amount of current distortion injected into the utility grid. Good performance can be obtained in the range of power levels up to hundreds of KW by using small values of inductors and capacitors. Higher harmonics attenuation of the LCL filter allows for the use of lower switching frequencies or meets harmonics constructions defined by standards such as IEEE-519 and IEEE-1547. However,

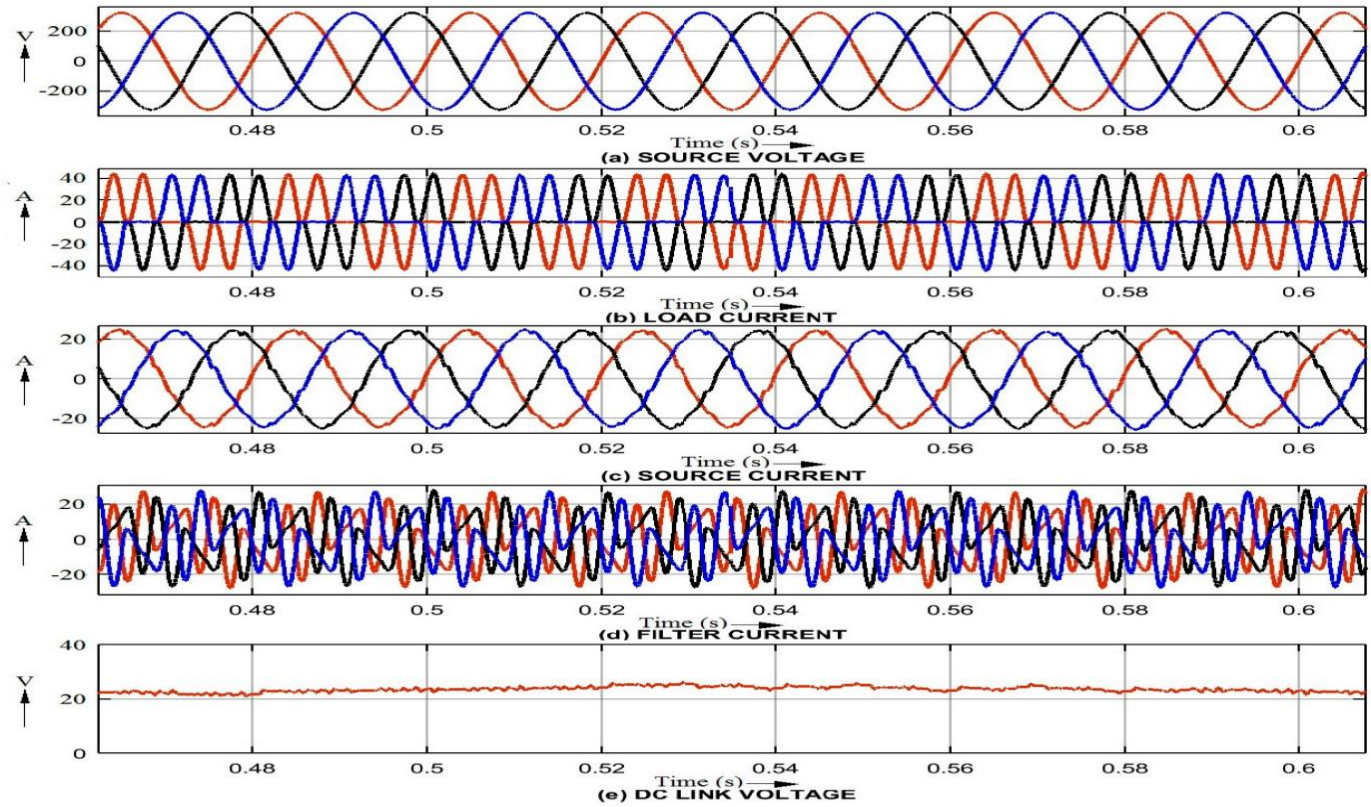

Performance analysis of passive damping in LCL filters:

For smoothing the output current from a VSI, a high-order LCL filter is commonly used in place of the conventional L-filter. Given the overall weight and size reduction of the components, the LCL filter achieves higher attenuation while saving money. Because they reduce the amount of current distortion injected into the utility grid, LCL filters have been used in grid-connected inverters and pulse-width modulated active rectifiers. With the help of small values of inductors and capacitors, good performance can be obtained in the range of power levels up to hundreds of KW. The LCL filter's higher harmonics attenuation enables the use of lower switching frequencies or meets harmonics constructions defined by standards such as IEEE-519 and IEEE-1547. However,

SIMULINK RESULT OF LCL FILTER WITH NONLINEAR LOAD:

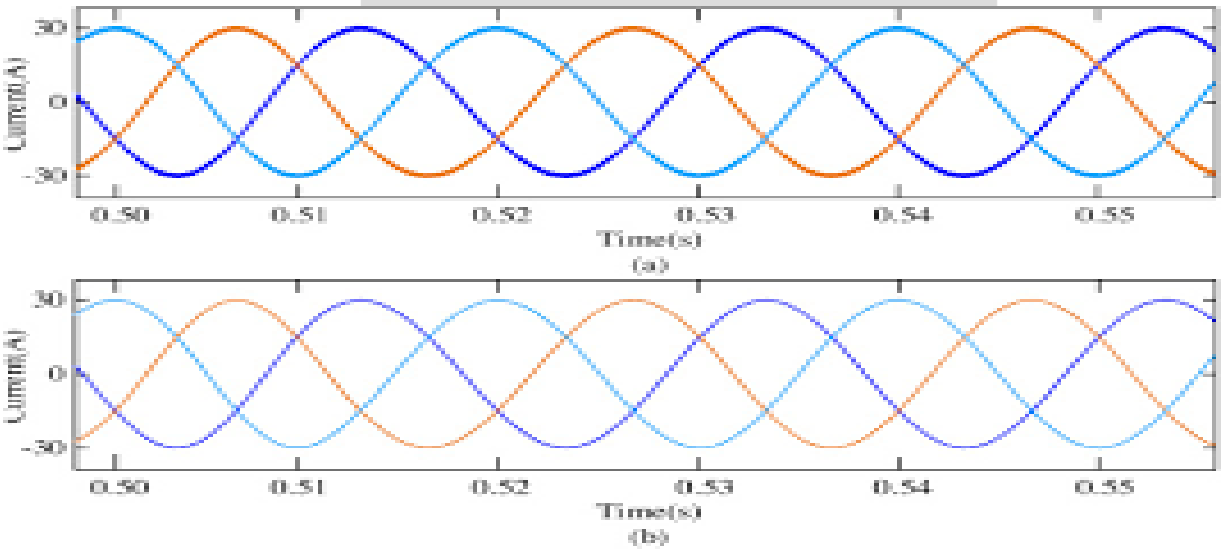

Simulink results of Active damping LCL filter with nonlinear load:

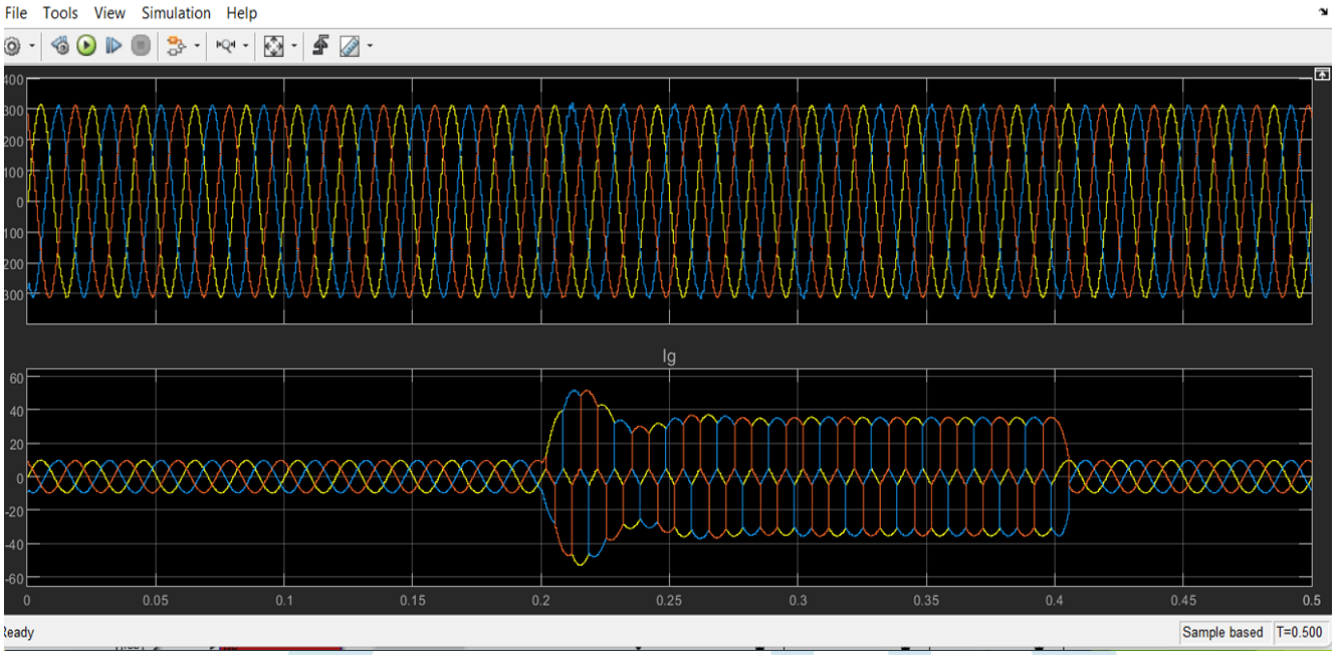

The above THD value is 0.52% there is improvement in the THD value where the resonance peak is decreased by using new technique called as the active damping method is used in the SRF theory. The resonance peak at the resonance frequency is to reduce by using the active damping method in the synchronous reference frame theory. That can be absorbed as the above the simulation. They have the difference in the Total Harmonic Distortion in the before THD we can absorbed the difference passive and active damping.

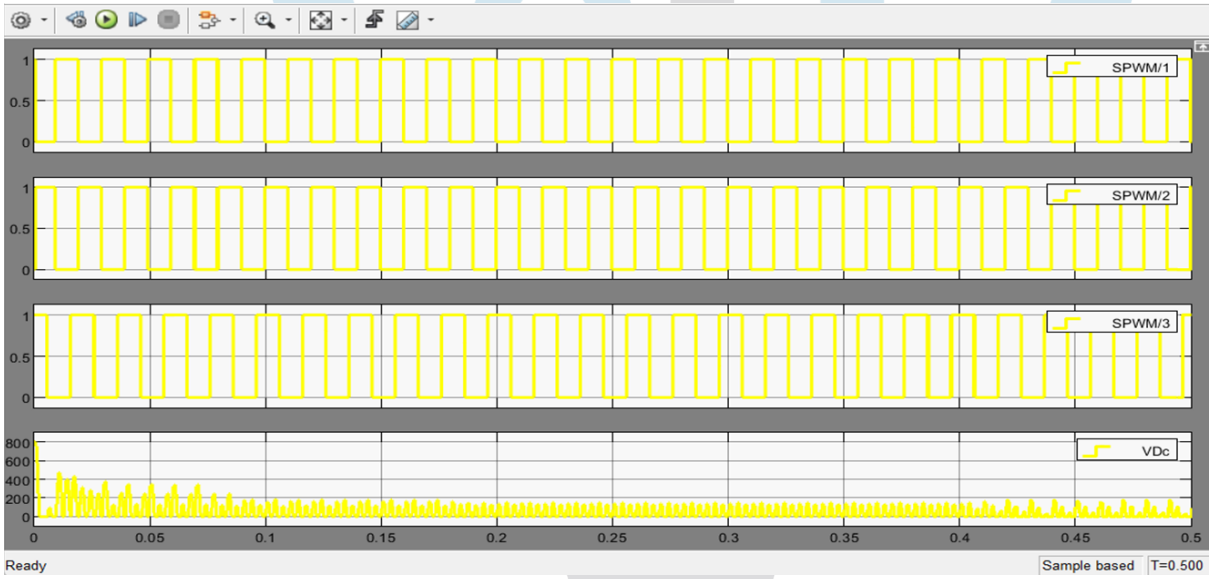

Present work of the project is that we want to take LCL filter for the economic purpose and to sort out the disadvantage of the LCL filter by using the active damping method.

VII CONCLUSION:

In conclusion, the use of a PV-based D-STATCOM is an effective way to improve power quality in electrical systems. By controlling the reactive power flow in the system, a D-STATCOM can help regulate voltage and reduce harmonic distortion, thereby improving the overall power factor of the system. PV-based D-STATCOMs have several advantages over traditional STATCOMs, including the ability to generate power from the PV array and the ability to operate at low voltage levels. This makes them ideal for use in distributed generation systems, where they can provide both power quality improvement and renewable energy generation. However, the design and implementation of a PV-based D-STATCOM requires careful consideration of factors such as control algorithms, sizing of the PV array and energy storage system, and protection schemes. Additionally, the cost of the system can be high, which may limit its adoption in certain applications.

REFERENCES

1. Kyo-Beum Lee, Sewan choi and Woojin Choi," Performance Improvement of LCL-Filter-Based Grid-Connected Inverter Using PQR Power Transformation", IEEE Transactions on power Electronics, Vol. 25, N05. Pp.1320-1330, 2009.
2. J. Zhao and X. FU, "Direct Grid Current Control of LCL-Filter Grid-connected Inverter Mitigating Grid Voltage Disturbance", IEEE Transactions on Power Electronics, Vol.29, N03, pp.1532-1541,2014.
3. M. Hanif, V. Khadkikar, X. Weeding," Two Degrees of Freedom Active Damping Technique for LCL-Filter Based Grid Connected PV System", IEEE Transactions on Industrial Electronics, Vol. 61, N06, pp.2795-2803,2014.
4. X. Wang, X. Ruan, S. Liu and C.K. Tse, 'Full Feedforward of Grid Voltage for Grid-Connected Inverter with LCL Filter to Suppress Current Distortion Due to Grid Voltage Harmonics", IEEE Transactions on Power Electronics, Vol. 25, N012, pp.3119-3127,2010.
5. J. Lettl, J. Bauer and L. Linhart," Comparison of different Filter Types for Grid Connected Inverter", PIERS Proceedings, pp. 1426-1429, Marrakesh, Morocco, March 20-23, 2011.
6. P. Wang, Y. Tang," Anew generalized design of shunt active filter with LCL filter", IEEE Ind.elec, Vol-54, issue-3, March-2012.