Design of Transformerless Solar-PV Inverter

Ramesh Uppara[1], Siri Priya Purimetla[1], Mallesh Naik Sugali[1] , Sravan Kumar Reddy Nimmakayala[1], Gourav Kumar Suman[2]

[1]Department of Electrical & Electronics Engineering
[2]Department of Electronics & Communication Engineering
Madanapalle Institute of Technology & Science
Madanapalle, India

***Abstract*— Transformerless single-stage inverters are preferred in private framework-associated PV frameworks when contrasted with galvanic-disconnected ones (i.e., transformer-based inverters). In addition to the special leakage current issue, grid-connected applications should consider high efficiency, power quality, and reactive power injection. Today, the rapid development of wide-bandgap (WBG) devices presents transformer-less inverters with new challenges, such as issues with electromagnetic interference (EMI), but efficiency can be improved. First, the topology configuration of full-bridge PV inverters is examined in this paper. Under a hybrid modulation method, the oscillation that occurs during switching transitions is compared and analyzed in typical full-bridge inverters, and there is a significant correlation between this phenomenon and the EMI problem. The thermal performance of the hybrid modulation scheme with reactive power injection is then revealed through a discussion of the distribution of power loss. The hybrid modulation strategy is discussed and validated through simulations on the full-bridge prototype.**

Key Words: DC Supply, PWM Generator, IGBT, Inductor, Capacitor.

INTRODUCTION:

Inverters are gadgets that convert DC to AC, and they are various purposes in environmentally friendly power frameworks, engine drives, and uninterruptible power supplies. beat width tweak (PWM) is utilized to deliver an air conditioner waveform that is like a sine wave. PWM includes shifting the width of the result beats while keeping the recurrence consistent.

A shut circle control conspire is introduced for the proposed transformer-less inverter to interface it with the power network. The proposed transformer-less inverter decreases additional spillage current and holds the familiar mode voltage at a consistent point.

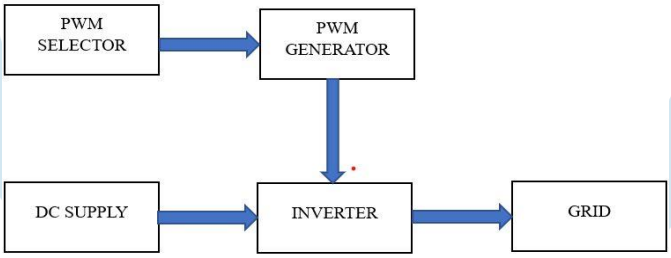

Fig 1. Block Diagram of inverter with/without filter

The block outline Fig 1 comprises of a DC supply, inverter, PWM generator, channel, and burden is a typical design utilized in power hardware applications. It changes over the DC into AC power, the power is utilized by many electrical gadgets. The DC supply drives the info voltage to the inverter, which is liable for changing over the DC voltage into a higher-recurrence AC waveform. The PWM produces the air conditioner waveform by the inverter by controlling the obligation pattern of the waveform. The AC waveform is expected for the heap, which can be any electrical device that needs AC power. the block diagram is used in applications such as motor control, renewable energy systems, and power distribution. By understanding the capability of each block in the outline, specialists can plan. PWM Selector is liable for choosing the ideal PWM waveform to be produced. It tends to be constrained by a microcontroller or some other control circuit to produce different PWM signals with changing obligation cycles. PWM GENERATOR creates the chose PWM waveform utilizing a heartbeat width tweak (PWM) strategy. The produced PWM signal is then taken care of to the inverter block. DC Supply gives a steady DC voltage that is utilized as a wellspring of force for the inverter. The DC supply can be gotten from a battery or some other power source. The inverter block changes over the DC voltage into an air conditioner voltage utilizing beat width regulation (PWM) method. The result of the inverter can be constrained by the PWM signal created by the PWM generator block.

TRANSFORMERLESS INVERTER:

A transformer less inverter is a kind of force inverter that doesn't utilize a transformer to change over DC power into AC power. All things considered, it utilizes semiconductor switches, like MOSFETs or IGBTs, to switch the DC input voltage on and off at high recurrence to make an air conditioner yield waveform.

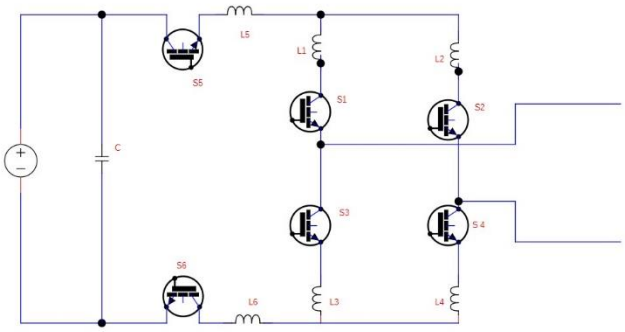

Fig 2. H6 DC Coupling Inverter

Transformer less inverters enjoy a few upper hands over customary inverters that utilization a transformer. They are more proficient, lighter, more modest, and more affordable. They likewise have less parts, and that implies that they are less inclined to bomb Nonetheless, transformerless inverters additionally have a few impediments. Since they don't utilize a transformer, they don't give separation between the DC input and the air conditioner yield. This intends that there is a gamble of electric shock on the off chance that the inverter isn't introduced and worked accurately. Also, transformerless inverters might be more delicate to voltage changes and commotion on the DC input, which can influence their exhibition. Notwithstanding these difficulties, transformerless inverters are turning out to be more famous in sun based power frameworks and different applications where effectiveness and cost are significant contemplations. Similarly as with a power hardware, legitimate plan, establishment, and activity are basic to guarantee protected and solid activity. In general, this undertaking expects to plan and upgrade a H6 dc coupling transformerless inverter utilizing IGBTs and Simulink models. The consequences of this venture will give important experiences into the plan and activity of H6 dc coupling transformerless inverters and their applications in power gadgets. In this review, we can work on the exhibition of an inverter involving the unipolar sinusoidal Heartbeat Width Tweak procedure for exchanging reason. By utilizing this kind of heartbeat width adjustment method to manage the framework receptive power. A network associated transformer-less PV inverter utilizes no transformer and can be associated straightforwardly to the power matrix. This kind of inverter is exceptionally productive, offers lower exchanging misfortunes, is lighter in weight, and is savvy.

SINE PWM:

Sinusoidal Heartbeat Width Balance (SPWM) is a regulation strategy that is utilized to control the result voltage of inverters. It includes contrasting a reference sinusoidal waveform and a transporter waveform to produce a balanced waveform that intently looks like the state of the reference waveform.

In SPWM, the exchanging grouping of the inverter switches relies upon the sufficiency of the reference sinusoidal waveform and the transporter waveform. At the point when the abundancy of the reference waveform is more noteworthy than the sufficiency of the transporter waveform, the inverter switches are turned on, and when the plentifulness of the reference waveform is not exactly the adequacy of the transporter waveform, the inverter switches are switched off.

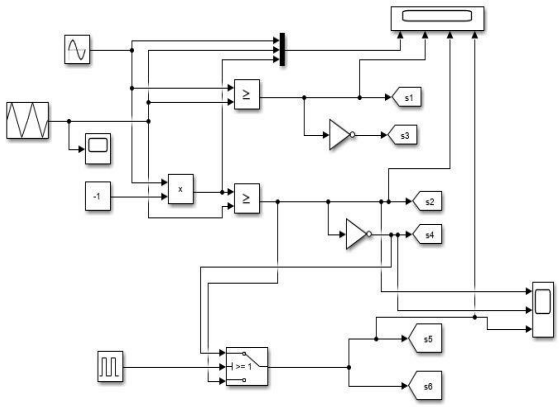

Fig 2.1. Sine PWM generation

Fig 2.1 Shows the generation of Sine PWM that is compared by the triangular wave i.e., is carrier wave form.

The calculation of Vpeak can be determined by:

$$V_{peak} = V_{rms} * \sqrt{2}$$

The term for which the inverter switches are on or off relies upon the examination between the reference and transporter waveforms. Numerically the Obligation cycle not set in stone by

$$D = \frac{V_{in}}{V_{peak}} * (\sin(2\pi f t) + 1)/2$$

The Output voltage without filter can be determined by the formula.

$$V_{out} = \frac{D * V_{in}}{\pi} V$$

The Output Voltage with filter can be determined by the formula.

$$V_{out} = \frac{D * V_{in}}{2\pi\sqrt{LC} * \sqrt{1 - D^2}} V$$

Where D is a Duty cycle, Vin is input voltage , Vpeak is peak voltage F is frequency ,T is time, L is inductor, C is capacitor, Vout is Output voltage.

One of the benefits of SPWM is that it delivers an almost unadulterated sinusoidal waveform with lower consonant bending contrasted with square wave regulation. In any case, it requires more complicated hardware and computational power contrasted with square wave regulation. Exchanging grouping of switches S5 and S6 are organized with the end goal that the two switches are follows switch S4 during positive half and furthermore same switches are follows switch S2 during negative half cycle. The switch S2 is reciprocal to switch S4 i.e., switch S2 has the contrary heartbeat contrasted with S4 i.e., when S2 in ON, S4 is OFF as well as the other way around. Beat width tweak (PWM) is the most usually involved exchanging strategy in single-stage inverters. It works by controlling the width of the result beats, which are then separated to create an air conditioner waveform. The width of the result beats is constrained by differing the obligation pattern of the info waveform. The obligation cycle is the proportion of the ON chance to the complete time span of the waveform. By shifting the obligation cycle, the adequacy of the result waveform can be controlled, which thus controls the power conveyed to the heap.

FILTER DESIGN:

A LC channel, or a detached channel, is an electrical circuit that comprises of inductors (L) and capacitors (C) associated in a particular setup to supply sift through undesirable signs or sounds from a power. LC channels are usually utilized in power hardware applications, like inverters, to lessen the consonant substance in the result waveform.

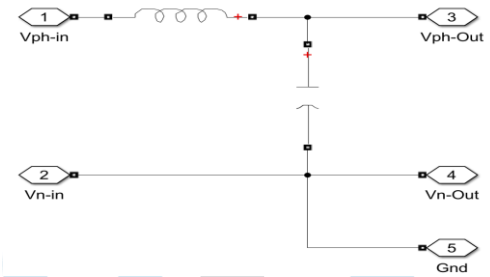

Fig 2.2. Simulation of Filter Design

The Fig 2.2 shows the LC channels that are basic, dependable, and financially savvy answers for lessening symphonious bending in power electronic frameworks. Notwithstanding, they have a few impediments, for example, a restricted recurrence range and a propensity to resound at specific frequencies. Accordingly, LC channels ought to be painstakingly planned and enhanced for the application to accomplish the ideal presentation.

The end recurrence of the channel can be determined utilizing the equation:

$$F_c = \frac{1}{2\pi\sqrt{LC}}$$

SIMULATION OF INVERTER:

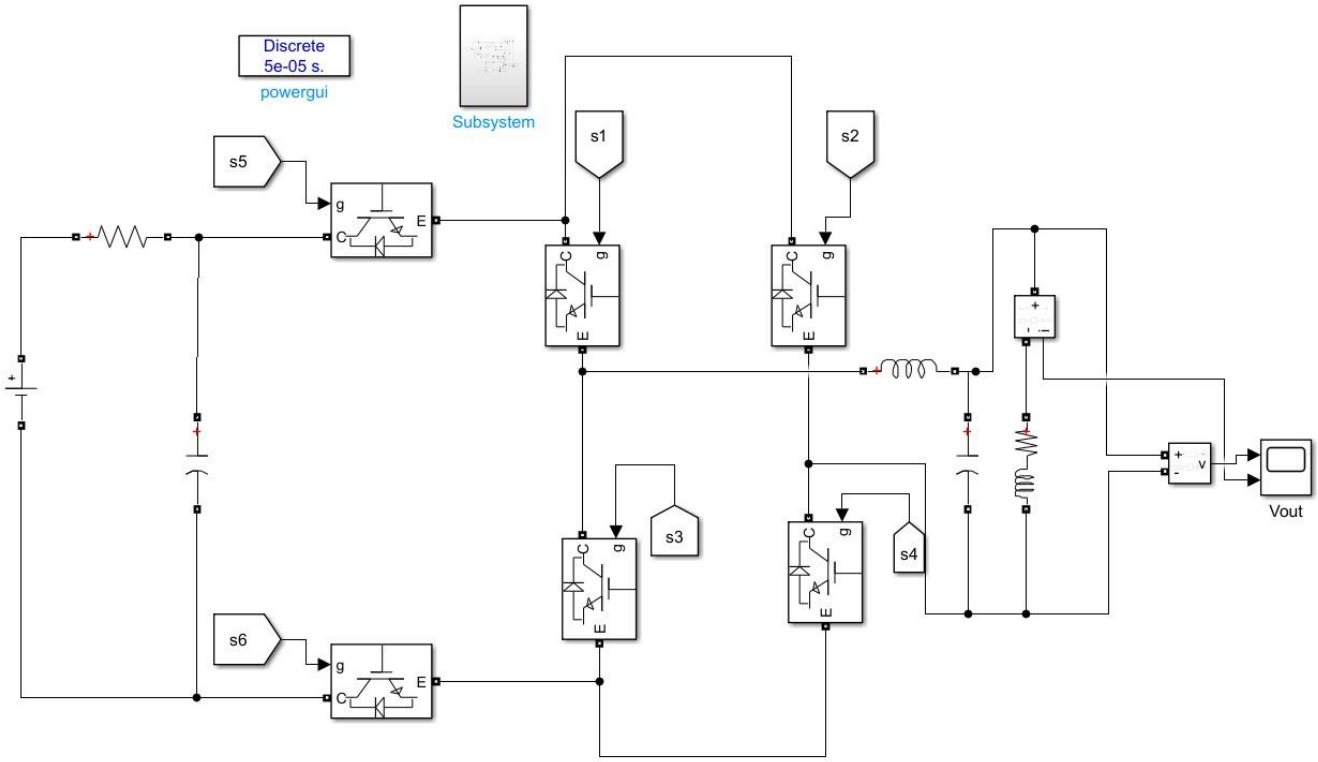

Fig 2.3. Simulation diagram of transformerless inverter

Simulation of inverter in Simulink
Simulation time = 0.2sec

Sl. No	Parameter	Values
1.	Input DC Voltage	220V
2.	Carrier Frequency	1KHz
3.	Fundamental Frequency	50Hz
4.	Output Voltage	220V
5.	Active Load/ Resistive Load	100 Ω

Table 1.1. Parameters used in simulation.

In view of Table 1.1, the framework is a voltage source inverter (VSI) that changes over a DC input voltage (going from 100V to 220V) into a variable AC yield voltage (going from 100V to 220V) at a proper recurrence of 50Hz. The inverter works at a transporter recurrence of 1kHz, which is a lot higher than the basic recurrence of the result waveform. The heap being provided by the inverter is a functioning burden or resistive burden with an opposition of 100ohms, and that implies that it draws a consistent current from the inverter no matter what the result voltage.

SIMULATION RESULTS:
The simulation results for inverter without Filter:

PWM	V_i (V)	I_i (A)	V_o (V)	I_o (A)	THD (%)
SPWM	220	4.5	220	2.29	56.35

Table 1.2. Simulation results without filter

Table 1.2, The information voltage is almost 220V, however the THD is exceptionally high. The sine PWM procedure seems to give a decent harmony between yield voltage and THD for the given boundaries.

The simulation results for inverter with filter:

Inductor = 0.177H

Capacitor = 34.3uf

PWM	V_i (V)	I_i (A)	V_o (V)	I_o (A)	THD (%)
SPWM	220	4.5	222	2.177	7.76

Table 1.1. Simulation results with filter

Table 1.2 shows the consequences of reenactment utilizing LC channel. This PWM gives high voltage when contrasted with other. The SPWM strategy seems to give the most minimal THD.

OUTPUT VOLTAGE:

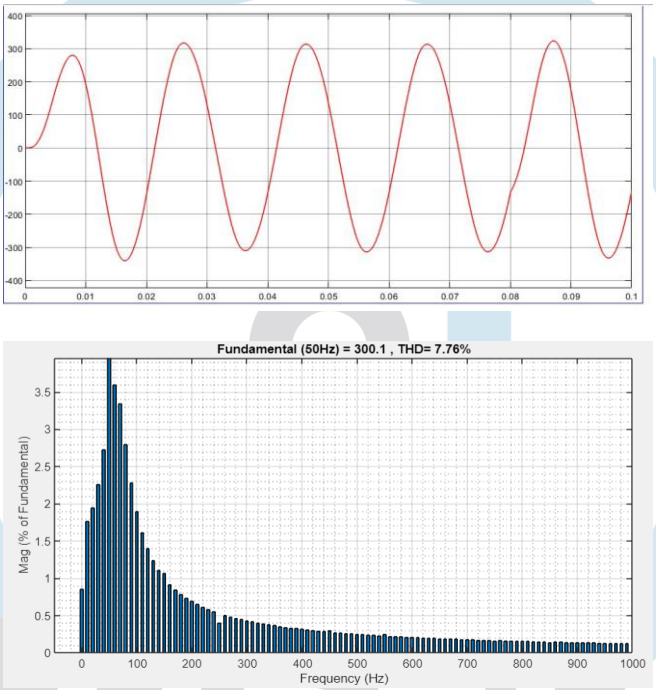

Fig 1.3. Sine PWM Results

The Fig 1.3 shows the result waveforms with channel L = 0.177H, C = 34.3uf. The THD is 7.76% and top voltage is 315V.

Total Harmonic Distortion (THD) is a measure of the level of distortion present in an electrical signal, typically an audio signal. It is expressed as a percentage of the total signal power and represents the ratio of the root-mean-square (RMS) value of the harmonics in the signal to the RMS value of the fundamental frequency.

In other words, THD is a measure of how much of the original signal has been replaced by harmonic frequencies. Harmonics are integer multiples of the fundamental frequency, and they can be introduced by non-linearities in electronic circuits or components, such as amplifiers, speakers, or transformers.

THD is an important parameter to consider in audio applications because it can affect the perceived sound quality. High levels of THD can cause the sound to become distorted or "muddy", while low levels of THD can result in a clearer and more natural sound's can be measured using specialized equipment, such as a distortion analyzer, which applies a test signal to the device under test and measures the level of harmonic distortion in the output signal.

OUTPUT CURRENT:

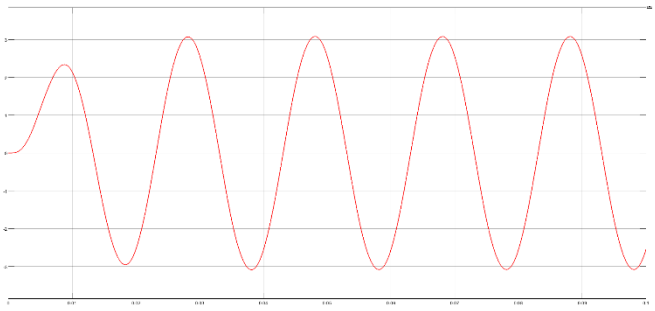

Fig 1.4 Output Current with filter.

CONCLUSION:

In this paper, the PV inverters have been ordered and surveyed by the spillage current concealment. Then, at that point, the replacement swaying, and misfortune dispersion exhibitions have been dissected in chosen PV inverters under the mixture UPWM technique with responsive influence infusion. The indistinguishable circle inductances in various substitution modes have great swaying execution, helping the EMI channel plan. Then, at that point, an exhaustive correlation of the full-span inverters has been introduced in spillage current concealment, proficiency, misfortune conveyance, wavering, and framework costs. At long last, reenactments approved the examination of misfortune circulation under the half breed regulation technique with responsive influence infusion in the full-span inverter. Besides, the decision of inductor and capacitor values in the channel circuit influences the result waveform and THD. Higher upsides of inductor and capacitor bring about lower THD yet may expand the expense of gear. Then again, lower upsides of inductor and capacitor might lessen the expense of hardware yet may bring about higher THD. The Result voltage and current is in stage.

By and large, it is prescribed to involve a channel in the inverter circuit to work on the nature of the result waveform and diminish THD, while choosing proper qualities for the inductor and capacitor to adjust among execution and cost.

REFERENCES:

1. International Renewable Energy Agency (IRENA), Renewable capacity statistics 2021, Mar. 2021, https://www.irena.org//media/Files/IRENA/Agency/Publication/2021/Apr/IRENA_RE_Capacity_Statistics_2021.pdf, last accessed Apr. 06, 2021.
2. Biswas, M.; Biswas, S.P.; Islam, M.R.; Rahman, M.A.; Muttaqi, K.M.; Muyeen, S.M. A New Transformer-Less Single-Phase Photovoltaic Inverter to Improve the Performance of Grid-Connected Solar Photovoltaic Systems. Energies 2022, 15, 8398
3. Haq, S.; Biswas, S.P.; Hosain, M.K.; Rahman, M.A.; Islam, M.R.; Jahan, S. A modular multilevel converter with an advanced PWM control technique for grid-tied photovoltaic system. Energies 2021, 14, 331.
4. Son, G.; Huang, Z.; Li, Q.; Lee, F. Analysis and control of critical conduction mode high-frequency single-phase transformer-less PV inverter. IEEE Trans. Power Electron. 2021, 36, 13188–13199.
5. Biswas, M.; Biswas, S.P.; Islam, M.R.; Rahman, M.A.; Muttaqi, K.M. A new H7 transformer-less single-phase inverter to improve the performance of grid-connected solar photovoltaic systems. In Proceedings of the 2021 IEEE Industry Applications Society Annual Meeting (IAS), Vancouver, BC, Canada, 10–14 October 2021; pp. 1–6.
6. Y.P. Siwakoti, F.Z. Peng, F. Blaabjerg, P.C. Loh, G.E. Town, Impedance-source networks for electric power conversion part I: a topological review, IEEE Trans. Power Electron. 30 (2) (2015) 699–716.
7. J.L. Hudgins, G.S. Simin, E. Santi, M.A. Khan, An assessment of wide bandgap semiconductors for power devices, IEEE Trans. Power Electron. 18 (3) (May 2003) 907–914.
8. Bindra, Wide-Bandgap-Based Power Devices: reshaping the power electronics landscape, IEEE Power Electron. Mag. 2 (1) (Mar. 2015) 42–47.
9. R. Araneo, S. Lammens, M. Grossi, S. Bertone, 'EMC issues in high-power grid– connected photovoltaic plants, IEEE Trans. Electromagn. Compat. 3 (51) (2009) 639–64.