Performance Analysis of Single Phase Inverter Using Different Modulations Techniques

[1]Manideep Kuntimaddi, [2]Shahina Burudapeta, [3]Shakoor Baba Dori, [4]Yaswanth Kumar Polupoina, [5]Arul kumar K

[1]Student, [2]Student, [3]Student, [4]Student, [5]Faculty
[1]Department of Electrical & Electronics Engineering
[1]Madanapalle Institute of Technology & Science, Madanapalle, India

***Abstract*— This study aims to compare the performance of a single-phase inverter with different modulation techniques, especially square, sine, and trapezoidal pulse width modulation. A carrier frequency of 10 kHz and a fundamental frequency of 50 Hz are considered.To conduct the analysis, simulations are performed using MATLAB/Simulink software. The simulation model includes an inverter circuit with an output filter and a resistive load. The performance of each modulation technique is evaluated based on metrics such as total harmonic distortion (THD), and output waveform stability. In conclusion, the study shows that the sine PWM method is the most effective modulation method for the single-phase inverter with a 10 kHz carrier frequency and 50 Hz fundamental frequency. Its low THD, high efficiency, and robust output waveform make it the ideal choice for a variety of applications such as solar power systems, and motor drives.**

Index Terms— Inverter design, H-bridge, PWM, Square wave modulation, SPWM, Trapezoidal PWM, LC filter, Inductor, Capacitor, Active Load, filter, THD, Simulink, IGBTs.

I. INTRODUCTION

Inverters are devices that convert DC to AC, and they are different uses in renewable energy systems, motor drives, and uninterruptible power supplies. pulse width modulation (PWM) is used to produce an AC waveform that is similar to a sine wave. PWM involves varying the width of the output pulses while keeping the frequency constant.

There are various PWM techniques available for inverter circuits, including square, sine, and trapezoidal PWM. Each technique has its own advantages and disadvantages, and the choice of technique depends on the specific application requirements.

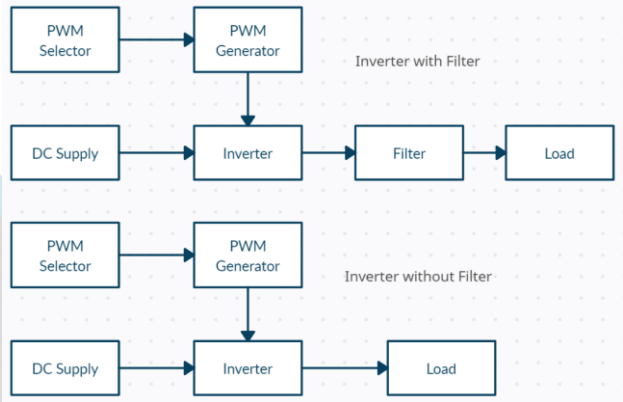

Fig 1. Block Diagram of inverter with/without filter

The block diagram Fig 1 consists of a DC supply, inverter, PWM generator, filter, and load is a common layout used in power electronics applications. It converts the DC into AC power, the power is used by a wide range of electrical devices. The DC supply drives the input voltage to the inverter, which is responsible for converting the DC voltage into a higher-frequency AC waveform. The PWM generates the AC waveform by the inverter by controlling the duty cycle of the waveform. The output of the inverter is then passed through a filter, which removes noise or harmonics of any frequency in the waveform. the AC waveform is required for the load, which can be any electrical device that needs AC power. the block diagram is used in applications such as motor control, renewable energy systems, and power distribution. By understanding the function of each block in the diagram, engineers can design

In this study, we compare the performance of an inverter using the above-mentioned PWM techniques, namely square, sine, and trapezoidal. We aim to determine which technique provides the best compromise between cost-effectiveness and quality of the output waveform. We select specific techniques based on their advantages and disadvantages and the specific application requirements. By analysing the performance of each technique, we hope to provide insights into the best choice of PWM technique for different applications.

II. DESIGN OF INVERTER

A. H-Bridge Inverter

The H-bridge inverter is a widely used circuit in power electronics, especially for applications that require high power conversion efficiency, such as motor drives and renewable energy systems.

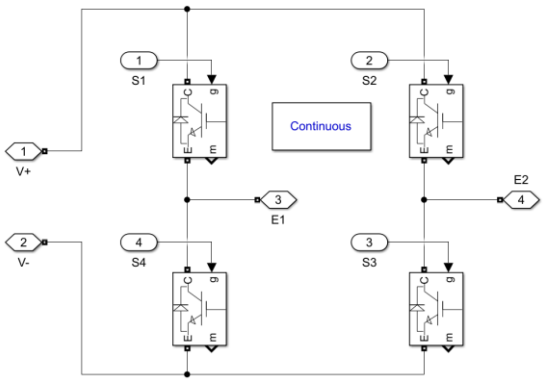

Fig 2. simulation of H-Bridge inverter

The circuit Fig 2 consists of four switches that are arranged in an H-bridge configuration, and it converts a DC voltage into an AC voltage by controlling the switching sequence of the switches. In this project, we aim to design and analyse the performance of an H-bridge inverter using IGBTs (Insulated Gate Bipolar Transistors) and Simulink models. IGBTs are commonly used in high-power applications due to their low on-state voltage drop and high switching speed. The Simulink model provides a convenient platform for designing and simulating the inverter circuit and for optimizing its parameters.

The main focus of the project is to investigate the performance of the inverter under different operating conditions and modulation techniques. We will explore the square, sine, and trapezoidal pulse width modulation (PWM) techniques, which are commonly used in H-bridge inverter applications. By analysing the output waveform of the inverter and measuring its efficiency, we will compare the performance of the different modulation techniques and determine which one is most suitable for specific applications.

Overall, this project aims to design and optimize an H-bridge inverter using IGBTs and Simulink models and to analyse the performance of different modulation techniques. The results of this project will provide valuable insights into the design and operation of H-bridge inverters and their applications in power electronics.

B. SQUARE WAVE MODULATION

Square wave modulation is a type of pulse width modulation (PWM) technique that is commonly used in inverter applications. It involves the generation of a square wave voltage waveform that is used to control the switching sequence of the inverter switches. The square wave voltage waveform has a constant amplitude and is either at its maximum or minimum value during each half cycle of the fundamental frequency.

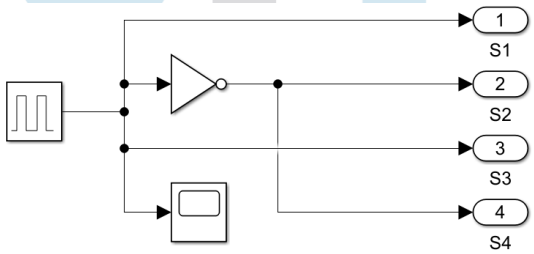

Fig 2.1. Square PWM generation

The Fig 2.1 shows the generation of Square PWM using pulse generator. The duty cycle of the modulated waveform can be expressed as:

$$Duty\ Cycle, D = \frac{T_{on}}{T} * 100$$

The Output voltage can be determined by the formula:

$$V_{out} = V_{in} * \text{Duty Cycle V}$$

By assuming 50% Duty cycle, at least 200V DC is Required

One of the advantages of square wave modulation is its simplicity and ease of implementation. However, it also has some drawbacks, such as high harmonic distortion in the output waveform, which can cause interference with other electronic devices. To reduce the harmonic distortion, an LC filter can be used in conjunction with the inverter circuit.

C. SINE PWM

Sinusoidal Pulse Width Modulation (SPWM) is a modulation technique that is used to control the output voltage of inverters. It involves comparing a reference sinusoidal waveform with a carrier waveform to generate a modulated waveform that closely resembles the shape of the reference waveform.

In SPWM, the switching sequence of the inverter switches depends on the amplitude of the reference sinusoidal waveform and the carrier waveform. When the amplitude of the reference waveform is greater than the amplitude of the carrier waveform, the inverter switches are turned on, and when the amplitude of the reference waveform is less than the amplitude of the carrier waveform, the inverter switches are turned off.

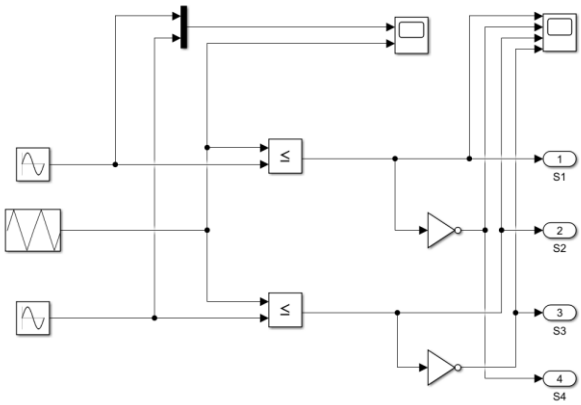

Fig 2.2. Sine PWM generation

Fig 2.2 shows the generation of Sine PWM that is compared by the triangular wave i.e., is carrier wave form.
The calculation of V_{peak} can be determined by:

$$V_{peak} = V_{rms} * \sqrt{2}$$

The duration for which the inverter switches are on or off depends on the comparison between the reference and carrier waveforms. Mathematically the Duty cycle can be determined by

$$D = \frac{V_{in}}{V_{peak}} * (\sin(2\pi f t) + 1)/2$$

The Output voltage without filter can be determined by the formula.

$$V_{out} = \frac{D * V_{in}}{\pi} V$$

The Output Voltage with filter can be determined by the formula.

$$V_{out} = \frac{D * V_{in}}{2\pi\sqrt{LC} * \sqrt{1 - D^2}} V$$

Where D is Duty Cycle, V_{in} is Input Voltage, V_{peak} is Peak Voltage, f is Frequency, t is time, L is inductor, C is Capacitance, V_{out} is Output Voltage.

One of the advantages of SPWM is that it produces a nearly pure sinusoidal waveform with lower harmonic distortion compared to square wave modulation. However, it requires more complex circuitry and computational power compared to square wave modulation.

D. TRAPEZOIDAL PWM

Trapezoidal PWM is a modulation technique that is used to control the output voltage of inverters. It involves generating a trapezoidal waveform that is compared with a reference waveform to generate a modulated waveform. The trapezoidal waveform is generated by varying the duty cycle of a square wave with a fixed frequency.

The duration of each switching interval depends on the value of the reference waveform. When the reference waveform is above the trapezoidal waveform, the inverter switches are turned on, and when the reference waveform is below the trapezoidal waveform, the inverter switches are turned off.

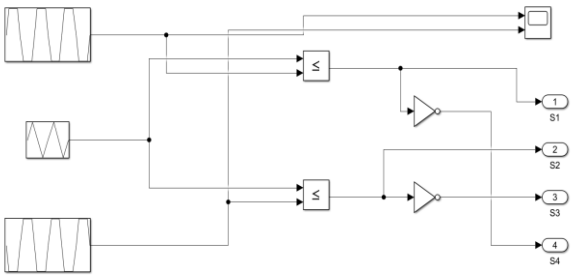

Fig 2.3. Trapezoidal PWM

This Fig 2.3 shows the generation of Trapezoidal PWM using Sequence generator and compared with the carrier waveform. In Simulink, the trapezoidal waveform can be generated using a sequence generator block. The block can be configured to output a sequence of values that represents the trapezoidal waveform. The output of the sequence generator can be used as the carrier waveform for the PWM module.

E. FILTER DESIGN

An LC filter, or a passive filter, is an electrical circuit that consists of inductors (L) and capacitors (C) connected in a specific configuration to filter out unwanted signals or harmonics from a power supply. LC filters are commonly used in power electronics applications, such as inverters, to reduce the harmonic content in the output waveform.

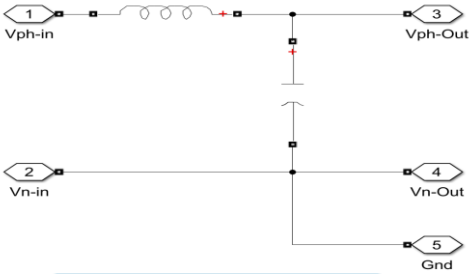

Fig 2.4. Simulation of Filter Design

The Fig 2.4 shows the LC filters that are simple, reliable, and cost-effective solutions for reducing harmonic distortion in power electronic systems. However, they have some limitations, such as a limited frequency range and a tendency to resonate at certain frequencies. Therefore, LC filters should be carefully designed and optimized for the specific application to achieve the desired performance.

The cutoff frequency (F_c) of the filter can be calculated using the formula:

$$F_c = \frac{1}{2\pi\sqrt{LC}}$$

III. SIMULATION OF INVERTER

Simulation of inverter in Simulink

Simulation time = 0.2sec

Sl. No	Parameter	Values
1.	Input DC Voltage	100-220V
2.	Carrier Frequency	10KHz
3.	Fundamental Frequency	50Hz
4.	Output Voltage	100V-200V
5.	Active Load/ Resistive Load	10 Ω

Table 1. Parameters used in simulation.

Based on Table 1, the system is a voltage source inverter (VSI) that converts a DC input voltage (ranging from 100V to 220V) into a variable AC output voltage (ranging from 100V to 200V) at a fixed frequency of 50Hz. The inverter operates at a carrier frequency of 10kHz, which is much higher than the fundamental frequency of the output waveform. The load being supplied by the inverter is an active load or resistive load with a resistance of 10 ohms, which means that it draws a constant current from the inverter regardless of the output voltage.

Without Filter

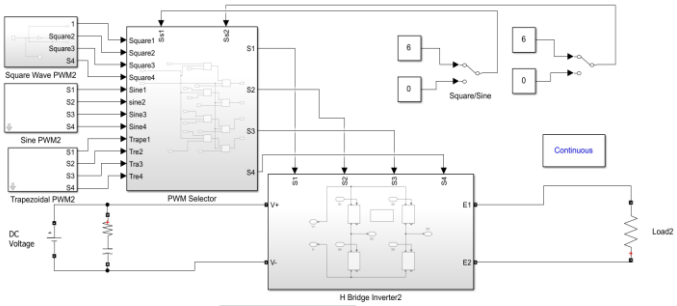

Fig 3.1 Simulation of Inverter without Filter

Fig 3.1 shows the simulation of inverter without using filter and the switch is provided to select the PWM and it is applied to the H-Bridge inverter.

With Filter

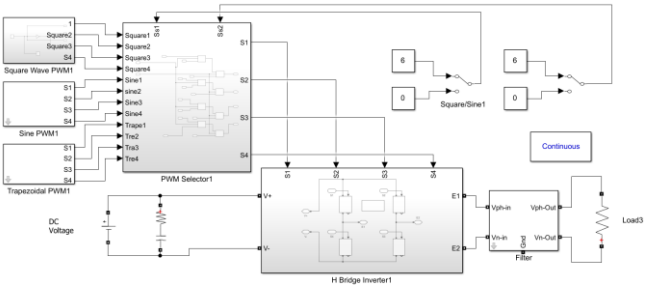

Fig 3.2 Simulation of Inverter with Filter

The Fig 3.2 shows the simulation of inverter using filter (LC filter) that give sinusoidal wave as output. The load is 10Ω R load. The switches are used to select between the PWM techniques.

IV. SIMULATION RESULTS

The simulation results for inverter without Filter:

PWM	V_i (V)	I_i (A)	V_o (V)	I_o (A)	THD (%)
Square	100	10	99.98	9.998	48.34
SPWM	100	7.979	79.77	7.977	52.56
Trapezoidal	100	8.944	89.42	8.942	35.65

Table 1.0. Simulation results without filter

Table 1.0, The square is given nearly 100V, but the THD is very high. The trapezoidal PWM technique appears to provide a good balance of output voltage and THD for the given parameters.

The simulation results for inverter with filter

Inductor = 110mH

Capacitor = 200uf

PWM	V_i (V)	I_i (A)	V_o (V)	I_o (A)	THD (%)
Square	220	6.454	54.39	5.439	13.15
SPWM	220	3.371	42.67	4.267	10.19
Trapezoidal	220	4.709	50.85	5.085	11.45

Table 1.1. Simulation results with filter

Table 1.1 shows the results of simulation using LC filter. The Square PWM gives high voltage as compared to other. The SPWM technique appears to provide the lowest THD.

The simulation results for inverter with filter

Inductor = 50mH

Capacitor = 300uf

PWM	V_i (V)	I_i (A)	V_o (V)	I_o (A)	THD (%)
Square	220	16.69	121	12.1	4.39
SPWM	220	9.296	94.93	9.493	0.62
Trapezoidal	220	12.72	113.1	11.31	2.38

Table 1.2. Simulation results with filter

Table 1.2 shows that the output filter reduces the output voltage and current of the inverter system but also reduces the THD of the output waveform. Among the three PWM techniques, the SPWM technique provides the lowest THD for the given parameters, while the square wave PWM technique provides the highest THD. The trapezoidal PWM technique provides an intermediate THD.

The simulation results for inverter with filter

Inductor = 30mH

Capacitor = 350uf

PWM	V_i (V)	I_i (A)	V_o (V)	I_o (A)	THD (%)
Square	220	31.49	211.2	21.12	3.66
SPWM	220	19.72	165.7	16.57	0.47
Trapezoidal	220	26.03	197.4	19.74	1.95

Table 1.3. Simulation results with filter

In Table 1.3, Among the three PWM techniques, the SPWM technique provides the lowest THD for the given parameters, while the square wave PWM technique provides the highest THD. The trapezoidal PWM technique provides an intermediate THD. As the inductance and capacitance values of the filter decrease, the output voltage and current increase, and the THD decreases.

Square PWM

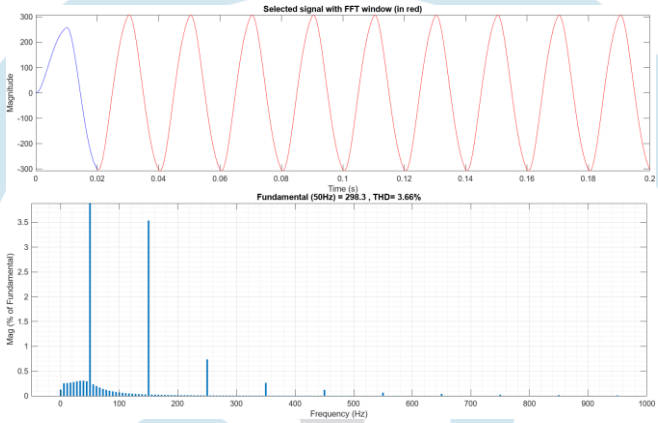

Fig 3.1. Square PWM results

The Fig 3.1, shows the output waveforms with filter L = 30mH, C = 350uf. The THD is 3.66% and peak voltage is 300V.

Sine PWM

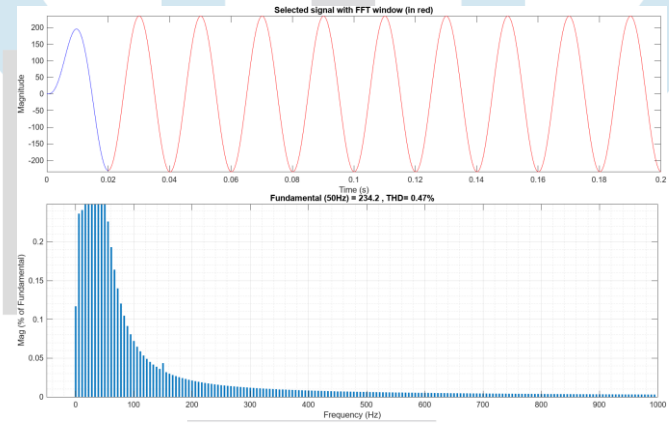

Fig 3.2. Sine PWM results

The Fig 3.2, shows the output waveforms with filter L = 30mH, C = 350uf. The THD is 0.47% and peak voltage is nearly 250V.

Trapezoidal PWM

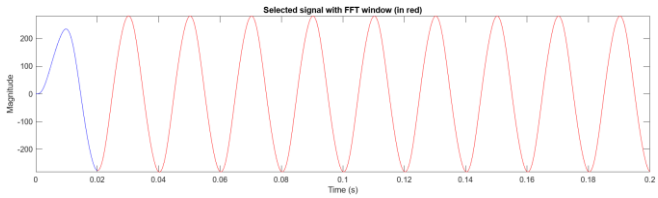

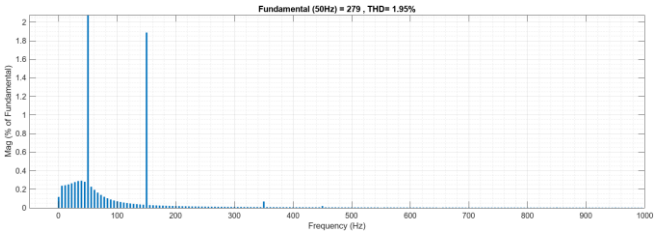

Fig 3.3. Trapezoidal PWM results

Fig 3.3 shows the output waveforms with filter L = 30mH, C = 350uf. The THD is 1.95% and peak voltage is nearly 279V.

Output Voltage & Current

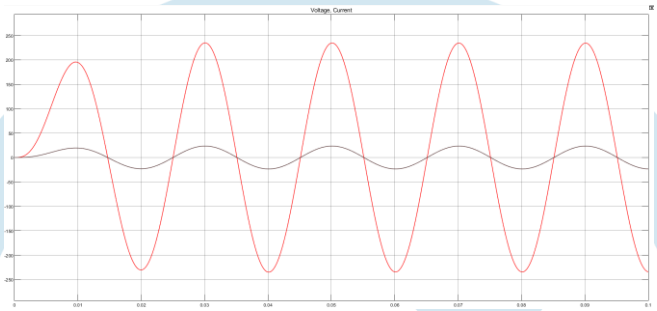

Fig 3.4 Output voltage and Current with filter.

Fig 3.4 shows that the output voltage is in phase with the output current.

V. CONCLUSION

Based on the simulation results, it can be concluded that using a filter in the inverter circuit significantly reduces the total harmonic distortion (THD) of the output voltage, which is important for improving the quality of the output waveform.

The results show that the square wave has the highest THD, followed by the trapezoidal wave, and the SPWM has the lowest THD. The Trapezoidal PWM has a high Output voltage with medium THD. The Trapezoidal shows the low THD and high voltage as compared to the square and SPWM without filter.

Moreover, the choice of inductor and capacitor values in the filter circuit affects the output waveform and THD. Higher values of inductor and capacitor result in lower THD, but may increase the cost of equipment. On the other hand, lower values of inductor and capacitor may reduce the cost of equipment but may result in higher THD. The Output voltage and current is in phase.

Overall, it is recommended to use a filter in the inverter circuit to improve the quality of the output waveform and reduce THD, while selecting appropriate values for the inductor and capacitor to balance between performance and cost.

REFERENCES

[1] Yusran, Ahmad Ikhsan, “Simulation Of Filter And Load Influence On Single Phase Inverter Against Voltage And Current Harmonic”, 2019 2nd International Conference on High Voltage Engineering and Power Systems (ICHVEPS) - Bali – Indonesia.

[2] S. Sabyasachi, V. B. Borghate, S. K. Maddugari and R. R. Karasani, "A modified reverse voltage inverter topology with inverted sine wave carrier PWM technique," *2017 IEEE Transportation Electrification Conference (ITEC-India)*, Pune, India, 2017, pp. 1-6, doi: 10.1109/ITEC-India.2017.8333863.

[3] F. Vargas-Merino, M. J. Meco-Gutierrez, J. R. Heredia-Larrubia and A. Ruiz-Gonzalez, "Slope modulation strategy for generated PWM," *2008 IEEE International Symposium on Industrial Electronics*, Cambridge, UK, 2008, pp. 403-405, doi: 10.1109/ISIE.2008.4676979.

[4] K. Thakre and K. B. Mohanty, "Performance improvement of multilevel inverter through trapezoidal triangular carrier based PWM," *2015 International Conference on Energy, Power and Environment: Towards Sustainable Growth (ICEPE)*, Shillong, India, 2015, pp. 1-6, doi: 10.1109/EPETSG.2015.7510170.

[5] P. Khluabwannarat, C. Thammarat, S. Tadsuan and S. Bunjongjit, "An analysis of iron loss supplied by sinusoidal, square wave, bipolar PWM inverter and unipolar PWM inverter," *2007 International Power Engineering Conference (IPEC 2007)*, Singapore, 2007, pp. 1185-1190.

[6] S. Liu, M. Xu, S. Wu and Y. Zhang, "A new trapezoidal PWM strategy for single-phase AC-DC converters," 2021 Chinese Control Conference (CCC), Shenyang, China, 2021, pp. 2027-2031.

[7] F. Gong, X. Zhang, H. Lin and Q. Lei, "A New Trapezoidal PWM Algorithm for Grid-Connected Inverters," in IEEE Transactions on Industrial Electronics, vol. 68, no. 7, pp. 5631-5642, July 2021.

[8] H. Bhatt, S. Singh, S. Singh and S. R. Bhatt, "Design and simulation of SPWM based voltage source inverter for photovoltaic system," 2021 International Conference on Power Electronics and IoT Applications in Renewable Energy and its Control (PARC), Noida, India, 2021, pp. 279-283, doi: 10.1109/PARC51708.2021.9500235.

[9] S. Singh, P. Singh and P. Jain, "Performance analysis of unipolar and bipolar PWM techniques for multilevel inverter," 2021 IEEE International Conference on Computing, Power and Communication Technologies (GUCON), Greater Noida, India, 2021, pp. 190-195, doi: 10.1109/GUCON53288.2021.9533765.

[10] P. R. Bhadra, P. S. Kumar and R. H. Shah, "Comparative Analysis of Square Wave, Sinusoidal Wave and Modified Sinusoidal Wave PWM Techniques for Voltage Source Inverter," 2019 2nd International Conference on Power Electronics and IoT Applications in Renewable Energy and its Control (PARC), Dhanbad, India, 2019, pp. 433-438, doi: 10.1109/PARC.2019.8767342.

[11] L. Zhang, L. Chen, X. Wu and X. He, "A Modular and Scalable Multilevel Inverter With Reduced Number of Components," in IEEE Transactions on Industrial Electronics, vol. 68, no. 3, pp. 1939-1950, March 2021, doi: 10.1109/TIE.2020.2962097.

[12] H. N. Hu, T. Y. Wang, H. L. Lee and H. Y. Wang, "Simulation of SPWM technique applied on single-phase inverter with AC filter for uninterruptible power supply," 2020 5th International Conference on Green Technology and Sustainable Development (GTSD), Hsinchu, Taiwan, 2020, pp. 1-4, doi: 10.1109/GTSD49356.2020.9340994.

[13] "A Low-Cost FPGA-Based SPWM Technique for Multilevel Inverter Control," by M. D. N. N. Hossain, A. R. Baki, and M. A. Khan, IEEE Transactions on Power Electronics, vol. 35, no. 5, pp. 4676-4683, May 2020.

[14] M. H. Aziz, M. R. Al-Mahasneh and S. M. I. Saad, "Novel Trapezoidal PWM technique for multi-level cascaded H-bridge inverter with photovoltaic systems," 2021 23rd International Middle East Power Systems Conference (MEPCON), Alexandria, Egypt, 2021, pp. 45-50.

[15] K. R. K. Reddy and N. S. S. S. S. L. Narasimha Rao, "Performance analysis of trapezoidal PWM and fuzzy logic based BLDC motor drive," 2021 International Conference on Power Electronics and IoT Applications (PEIA), Vellore, India, 2021, pp. 1-6.