ELECTRICAL VEHICLE CHARGING STATION CONNECTED TO GRID OVER IOT

Pasupuleti sai pradeep , Ramadhurgam Sasikaladevi , Chowdam Sasidhar , Bussi reddy Siva kiran reddy, K.Revathi

Department of Electrical & Electronics Engineering
Madanapalle Institute of Technology & Science,
Madanapalle, India

***Abstract*—As we know about the mass reception of EVs not too far off, the electric vehicle charging will become fundamental for both the charging point network administrators, and the public power matrix. EVs are gaining popularity all over the world. Infrastructure for charging EVs will also become a fundamental requirement as the number of EVs grows. By connecting to the grid, this work will produce a smart application that will inform users of the various grid tariff rates. The tax rates will incorporate both, the power admission rate and further more the active power rate. The battery SOC will also be displayed when the user enters the grid. The primary objective is to use rule-based algorithms to optimize low-carbon technologies through a single connected platform, thereby contributing to the decarbonization of energy production and consumption. This data is all uploaded to the IOT page. In conclusion, A user can decide the power management by analyzing the status of the battery also he/she can decide, to provide the excess amount of charge to other applications .A load is connected and simultaneously power consumption is measured by current transformer and displayed on LCD Display uploaded in a webpage over IOT.**

Keywords— EV STATION, Monitoring, Metering, IOT, Embedded, Microcontroller.arduino uno,wifi module

Introduction

Step by step, the hardware and IT industry fosters the frameworks according to the prerequisite of individuals and the climate. As engineers, we always try to meet requirements and think about what society needs. One system that meets these requirements is an IoT-based electric vehicle system. Additionally, this system contributes to environmental protection through reduced fuel consumption and pollution.

Electrical vehicles are becoming a very useful subject in today's world and are also becoming an important part of this smart world. The limited range of electric vehicles is one drawback. As a result, vehicles require constant charging. The purpose in building this framework is simply not EV but rather it's likewise gainful in place of expanded populace. According to the information we have, we know that there is a limited supply of fuel on Earth. As a result, it is critical that we find a different solution to this issue; electricity is one option.

The charging process is one of the most difficult aspects of entering the electric vehicle (EV) market. The main issue is that residential (apartment) buildings don't have the right infrastructure because they aren't ready for this new reality. There is a shared electricity issue in the apartment, which does not meet the needs of owners of electric vehicles. Systems have the potential to develop novel solutions to these issues based on recent advancements in the Internet of Things (IoT) as well as the sensors and communication platforms that are associated with it. Renter housing and the possibility of requiring assistance with electric vehicle charging are two additional aspects of this challenge. In townhouses, sadly, there is a general hesitance to introduce EV charging stations, which will just be utilized by a couple of proprietors. What's more, there is too an issue connected with the wellbeing of the electrical frameworks, as they are not effectively worked to help EV charging stations, and the change of the electrical framework of the loft won't just requires agreement among a larger part of proprietors, which can be troublesome, yet can likewise be hard to acquire, from government building wellbeing specialists. This is a barrier to adoption given that the majority of residential buildings have common areas with shared electrical installations and are not prepared for the installation of new EV charging systems.A review recognized four key pain points with regards to sharing ELECTRIC VEHICLE CHARGING Arrangement structures:The absence of charging infrastructure, building boundaries, regulatory issues, and the parking lot's availability. The block digarm of the proposed work is illustrated in Fig.1

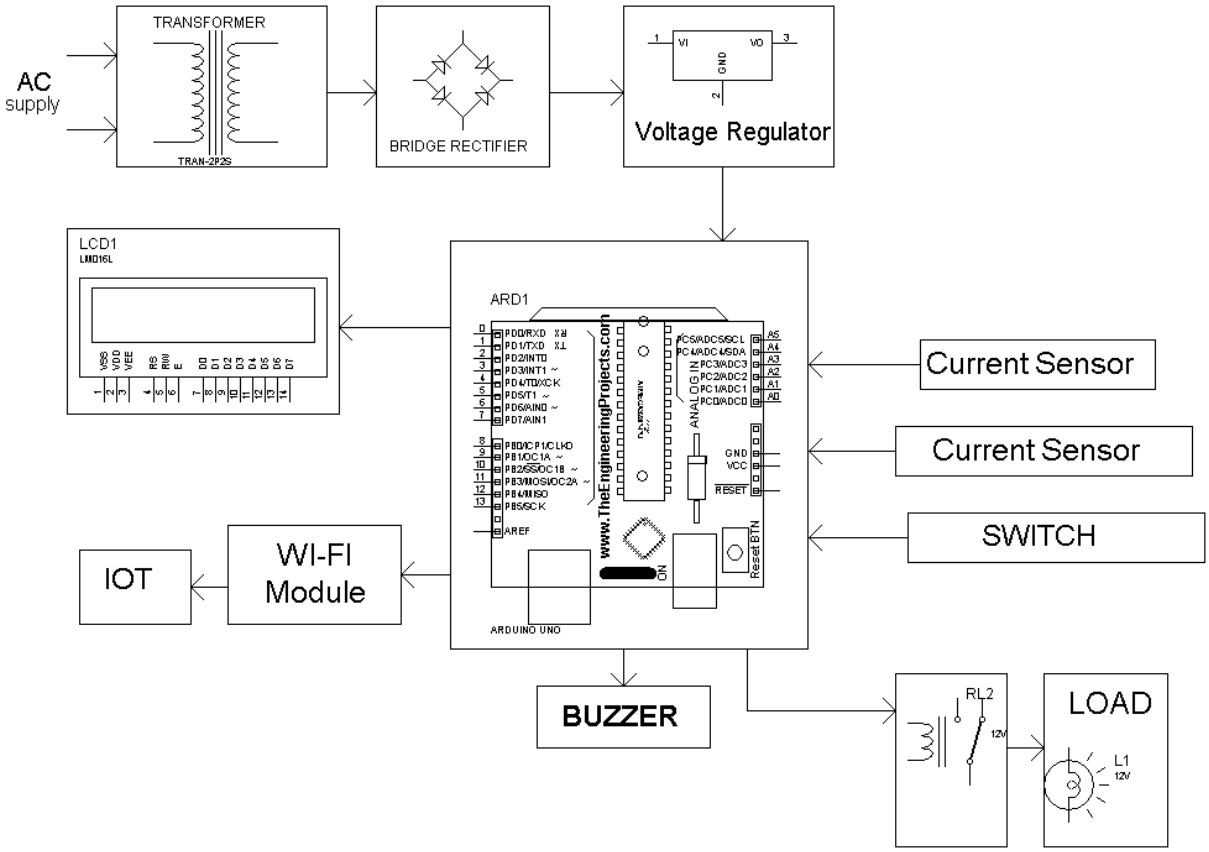

Fig 1. Block Diagram

Objectives:

1.With the prevalence of Internet of Things (IoT), EV charging station have become one of the main components of smart city strategies.
2.EV charging station Generate large amounts of fine-grained data that is used to provide useful information to consumers and utility companies for decision-making.
3.Now-a-days, EV charging station analytics systems consist of analytical algorithms that process massive amounts of data.
4.These analytics algorithms require sample amounts of realistic data for testing and verification purposes.
5.These EV charging station will read the energy consumed and upload the data over IOT page.

Components required

Hardware:

1.Arduino UNO
2.ESP32 wifi module
3.RELAY
4.Current Transformer
5.Lcd

Software:

1. Arduino UNO
2.ThingSpeak
3.egale

Proposed work:

EV charging includes supply of direct current (DC) to the battery pack. As power circulation frameworks supply substitute current (AC) power, a converter is expected to give DC capacity to the battery. An electric vehicle charging station is hardware that associates an electric vehicle (EV) to a wellspring of power to re-energize electric vehicles, neighborhood electric vehicles and module cross breeds.

Very much like a cell, EVs should be charged to have sufficient ability to keep on running. EV charging is the method involved with utilizing EV charging gear to convey power to the vehicle's battery. An EV charging station takes advantage of the electrical framework to charge an EV. The specialized term for EV charging stations is electric vehicle supply hardware (EVSE). An EV

charger pulls electric flow from the framework and conveys it to the electric vehicle through a connector or fitting. An electric vehicle stores that power in an enormous battery pack to drive its electric engine.
in this undertaking a 12v power supply is give to control the relay,in this technique two station are available
1.charging station
2.main station
At the point when ev station on that time current transformer measure the current and changed over current into wattage and showed on the lcd additionally the number of force utilizes that esteem likewise showed on the lcd consistently information can be straightforwardly transferred on the particulare approved website page.
We can observing information from anyplace and whenever.

Arduino Uno

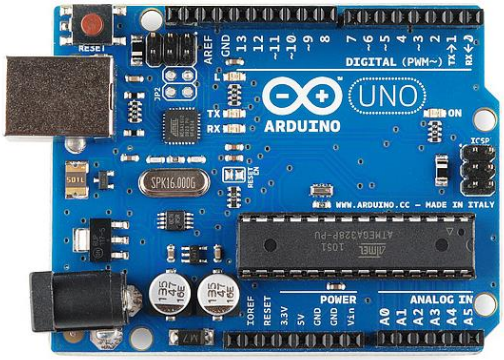

Fig 2. Arduino Uno

The popularity and ease of use of the Arduino platform and the ESP8266 module in electronics and programming projects. It highlights the advantages of the Arduino platform, such as the simplified version of C++ used in the Arduino IDE, the ability to load new code onto the board using a USB cable without needing a separate programmer, and the standard form factor that makes it accessible for beginners. It also mentions the ESP8266 module as a cheap and easy tool for creating internet of things (IoT) projects, with its capability to function as a Wi-Fi gateway, connect to web-based data using APIs, and its compatibility with the Arduino IDE. However, it also points out the limitation of the ESP8266 module operating only at 3.3V, which can be a potential risk for circuits if not handled properly.

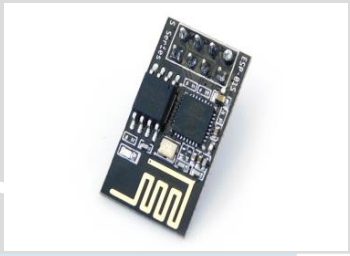

LCD

The basic functioning of LCD (liquid crystal display) technology, which utilizes polarizers and the light-modulating properties of liquid crystals to create color or monochrome images. It emphasizes that LCDs do not directly emit light, but rather rely on a back light or reflector to produce images.

Fig 3. LCD

login page

Fig ,real time usage power graph on web page

Users can also view hourly and weekly usage status.

Relay

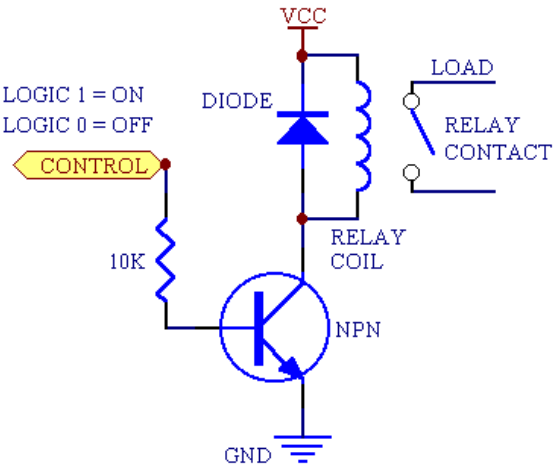

Fig 4.Relay

It deals with the guideline of an electromagnetic fascination. At the point when the circuit of the transfer detects the shortcoming current, it stimulates the electromagnetic field which creates the impermanent attractive field. This attractive field moves the transfer armature for opening or shutting the associations.

CURRENT TRANSFORMER

An Ongoing Transformer (CT) is utilized to gauge the current of another circuit. CTs are utilized overall to screen high-voltage lines across public power frameworks. A CT is intended to create an exchanging current in optional winding is relative to the ongoing that it is estimating in its essential. Flow Transformers are additionally used to safeguard the electrical framework against over-burdening and short circuits. These are known as Insurance Instrument Transformers. In these applications, the auxiliary leads of the ongoing transformers are associated with touchy estimating hardware, known as defensive transfers.

EV STATION

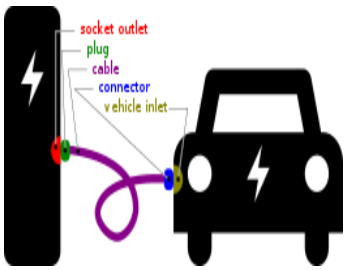

Fig 5. EV Station

POWER SUPPLY
230V AC
50HZ
5V DC

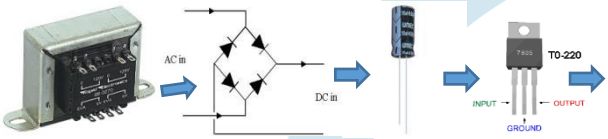

12V step down Transformer | Bridge rectifier | Filter(470µf) | 5V regulator

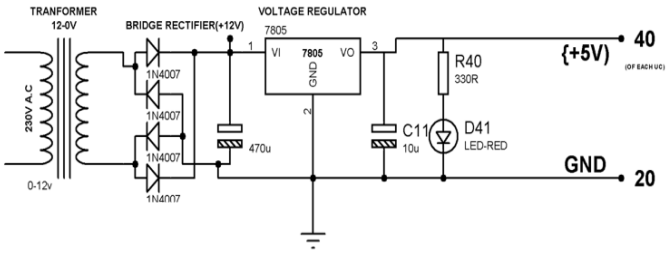

Fig 6.Power supply diagram

1. The circuit uses standard power supply comprising of a step-down transformer from 230v to 12v and 4 diodes forming a Bridge Rectifier that delivers pulsating dc which is then filtered by an electrolytic capacitor of about 470microf to 100microF.

2. The sifted dc being un controlled IC LM7805 is utilized to get 5v consistent at its pin no 3 regardless of info dc shifting from 9v to 14v.
3.A small electrolytic capacitor of 10 micro f further filters the regulated 5 volts dc to eliminate any noise produced by the circuit.
4.One LED is connected of this 5v point in series with a resistor of 330ohms to the ground i.e. negative voltage to indicate 5v power supply availability.

SIMULATION

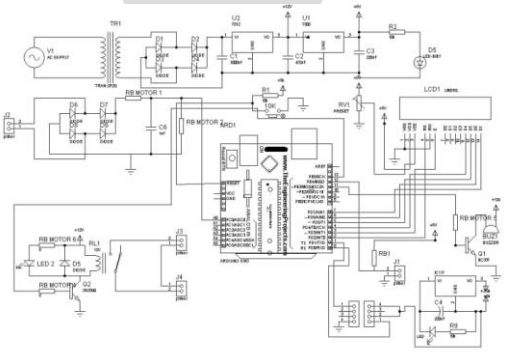

Fig 7.Simulation diagram

The simulation in Proteus begins by designing the circuit that includes components such as the Arduino micro controller, the WiFi module, the LCD display, the step-down transformer, the bridge rectifier, and the voltage regulator. The step-down transformer is used to convert the main AC voltage of 230V to 11V, which is then rectified to DC using the bridge rectifier. The DC voltage is regulated using a voltage regulator and connected to the Arduino to power it up. The Arduino reads the current data from the current transformer, calculates the power consumed by the resistive load, and sends the data to the WiFi module. The WiFi module is configured to connect to the ThingSpeak web page using the virtual wireless network in Proteus. The Arduino and WiFi module communicate using virtual serial communication in Proteus. The LCD display is configured to receive the power consumption data from the Arduino and displays it on the virtual LCD screen in Proteus. The simulated data is then sent to the ThingSpeak webpage through the virtual internet connection. The ThingSpeak webpage in Proteus is configured to receive the data from the virtual WiFi module and display it in real-time or store it for historical analysis. The simulation in Proteus allows for testing the behavior of the IoT system, including data acquisition, processing, communication, and display, under different conditions and inputs to validate its functionality and performance before deploying it in a real-world environment.

SIMULINK OUTPUT:

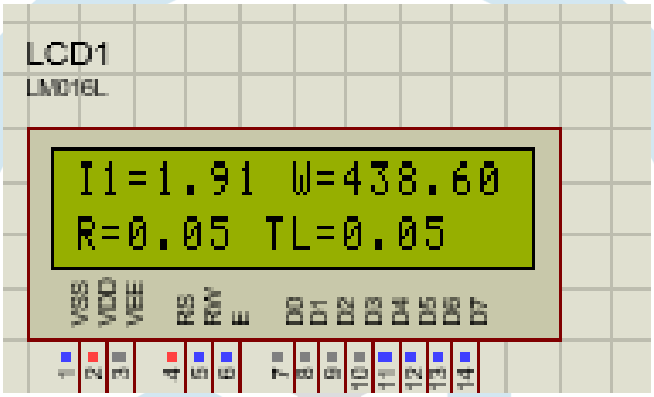

Fig 8. Simulink output

I1- Current measure in Amps
W- Total wattage in Watts
R-Rate Respective to Power consumption
TL- Total Consumption Rate

HARD WARE MODEL :

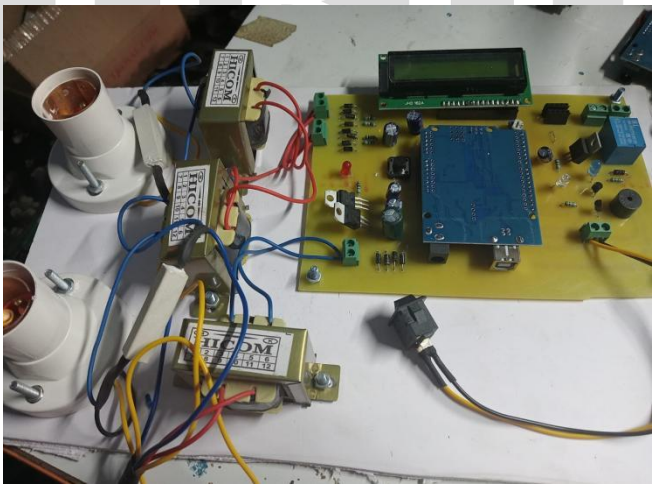

Fig 9. Hard ware model

The hardware model for the IoT-based EV charging station includes several key components, such as an Arduino micro controller, a WiFi module, two current sensors for measuring two different loads indicating them as two charging stations, a step-down transformer to convert the main AC voltage of 230V to 11V, a bridge rectifier to convert AC to DC, a voltage regulator to regulate the DC voltage, and an LCD display for displaying power consumption data. The Arduino reads the current data from the two current sensors, calculates the power consumed by each resistive load, and sends the data to the WiFi module. The WiFi module establishes a connection to a webpage, such as ThingSpeak, for data communication. The LCD display is configured to receive the

power consumption data from the Arduino and display it, separately indicating the power consumption of each charging station. The hardware model allows for the measurement and display of power consumption data for two different charging stations in the IoT-based EV charging station setup.

HARDWARE OUTPUT:

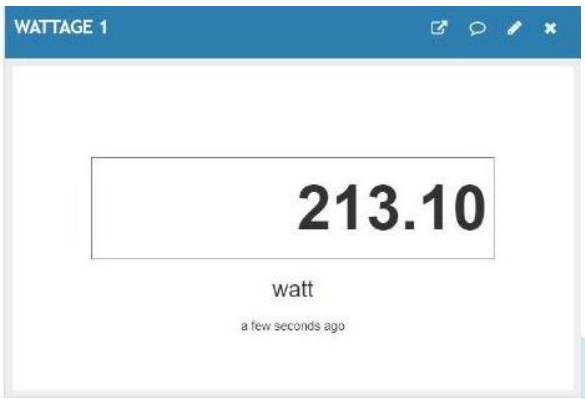

Fig 10. WATTAGE 1

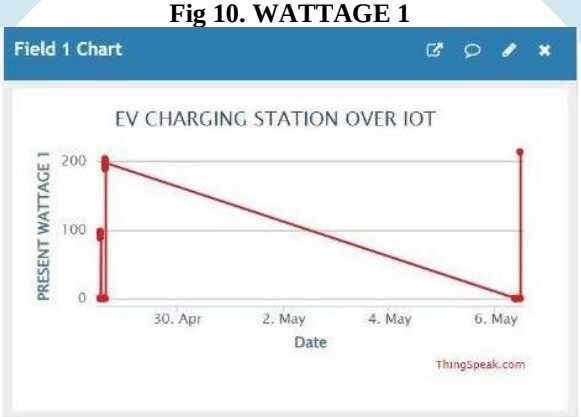

Fig 11. FIELD 1

Fig 12. USER 1 CONSUMPTION

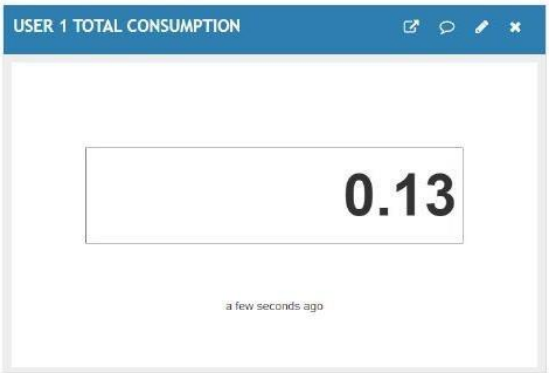

Fig 13. USER 1 TOTAL CONSUMPTION

Fig 14. WATTAGE 2

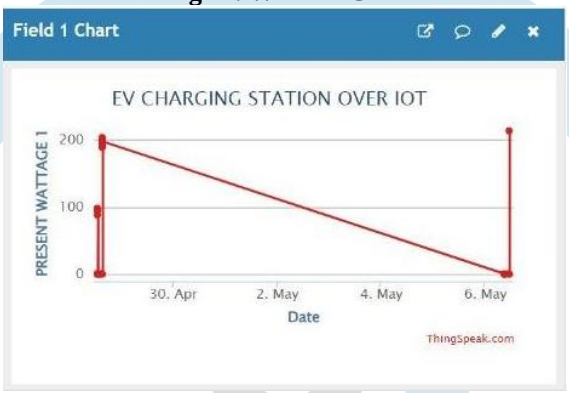

Fig 15. FIELD 2

Fig 16. USER 2 CONSUMPTION

Fig 17. USER 2 TOTAL CONSUMPTION

CONCLUSION:

The connectivity between the user and the car is based on IOT. A user can decide the power management by analyzing the status of the battery also he can decide, to provide the excess amount of charge to other applications. The main aim of this project is to minimize the difficulty in building charging stations for electric vehicles. By using above mentioned methods, charging stations can be built easily and can be maintained in a well manner for domestic purposes.

ACKNOWLEDGEMENT:

For each of us, working on this project was a positive experience. We were delighted to experience the degree of fulfillment that resulted from its completion. The kind assistance and direction of Mrs.K.Revathi, Department of Electrical Engineering ,Madanapalle Institute of Technology and Science, made this project possible.

REFERENCES:

1. K.S. Phadtare, S.S. Wadkar, S.S. Thorat, A.S. Ghorpade
2. "A Review on IoT based Electric Vehicle Charging an Parking System" Vol. 9 Issue 08, Aug-2020.
3. HUAWEI CHEN, (Student Member, IEEE), ZHOU SU ,
4. (Member, IEEE), YILONG HUI, (Student Member, IEEE),AND HUI HUI. "Dynamic Charging Optimization for Mobile Charging Stations in the Internet of Things".Sept 17, 2018.
5. S.Karthikeyan,H.Bragruthshibu,R.Logesh,K.Srinivasan, and 5S.Tarjanbabu "Solar Based Fast-Tag Charger for
6. Electrical Vehicle" .2021
7. Miss. Shital R. Khutwad. Mrs. Shruti Gaur. "Wireless Charging System for Electric Vehicle.
8. A. Arif, Muhannad AI-Hussain, Nawaf AL-Mutairi, "Experimental Study and Design of Smart Energy Meter for the Smart Grid" 978-1-4673-6374- 7© 2013 IEEE.
9. H G Rodney Tan, C.H. Lee, V.H. Mok, "Automatic powermeter reading system using GSM network", Conference (IPEC 2007).