Autonomous Unmanned Aerial Vehicle

[1]Manju Konkimalla, [2]Ninad Deshmukh, [3]Shivansh Rai, [4]Vinayak Ragho

[1,2,4]Student, [4]Professor
[1]Electronics and Communication Engineering
[1]School of Engineering and Science, MIT ADT University,Pune,India

Abstract: This research article describes a study aimed at creating an autonomous drone capable of flying without the need for human interaction. In particular Circumstances, it can also be manually controlled to land safely. The drone also transmits live video to a computer or other device, giving ongoing security footage. The drone can fly autonomously and automatically track pre-defined missions due to its architecture, which is operated wirelessly through a Graphical User Interface (GUI). To attain total autonomy, external navigation aids like radar systems and global positioning satellite systems are used. The paper provides a thorough overview of the system architecture, design, and implementation before discussing potential future research possibilities.

Index Terms: Autonomous , Surveillance , Navigation Satellite

I. INTRODUCTION

Unmanned aerial vehicles (UAVs) are playing an increasingly important role in our daily lives. As UAV applications require greater autonomy, the ability to operate without constant human supervision becomes critical. However, developing efficient and affordable flight control algorithms that address the limitations of the control surface presents a complex challenge. UAVs are deployed quickly and inexpensively in various applications, serving not only for reconnaissance but also as communication platforms. Compared to satellite communications, UAVs offer a simpler system design, high-speed communications, and low latency. A notable advantage of UAVs in aerial surveillance is their ability to reach higher speeds and move freely and independently of road networks. UAVs demonstrate cooperation, interaction, and group intelligence, with individual nodes offering interchangeability. The use of UAV cluster technology enables fast and effective task completion while ensuring high survivability and distributed functions. They can operate in hazardous conditions unsuitable for manned aircraft, such as during evacuations or severe weather. UAVs are programmed offline and controlled in real-time for the collection of navigation and transport surveillance data. They offer a comprehensive overview of the road network and enable the timely reporting of emergencies or accidents to base stations. In addition, they enable rapid assessment of disaster areas to determine the extent of damage.

II. OBJECTIVE

- To ensure comprehensive supervision and monitoring of the environmental ecosystem, promptly reporting any observations requiring immediate attention for security purposes and law enforcement by state security service agents.
- To deploy an efficient and systematic surveillance device that can monitor and report incidents necessitating immediate deployment based on security intelligence.
- To utilize crime, watch and law enforcement applications to identify, track, and monitor the movements of criminals, terrorists, robbers, and trace them to their hideouts.

III. LITERATURE REVIEW

W. Budiharto, A. A. S. Gunawan, J. S. Suroso, A. Chowanda, A. Patrik and G. Utama, "Fast Object Detection for Quadcopter Drone Using Deep Learning," 2018 3rd International Conference on Computer and Communication Systems (ICCCS), Nagoya, Japan, 2018

The paper presents our research progress in the development of object detection using deep learning based on drone cameras. The grand purpose of our research is to deliver important medical aid for patients in emergency situations. The case can be simplified into delivery of an item from start to the goal position.

P. Smyczyński, Ł. Starzec and G. Granosik, "Autonomous drone control system for object tracking: Flexible system design with implementation example," 2017 22nd International Conference on Methods and Models in Automation and Robotics (MMAR), Miedzyzdroje, Poland, 2017

This paper contains a presentation of the flexible control system for an autonomous UAV (unmanned air vehicle). The complete description of hardware and software solutions used to realize autonomous flight is presented in this work. Main objective of the research was to develop software which provides ease of adjustment and extendibility to drone system with different equipment.

G. A. Venkatesh, P. Sumanth and K. R. Jansi, "Fully Autonomous UAV," 2017 International Conference on Technical Advancements in Computers and Communications (ICTACC), Melmaurvathur, India, 2017

Ardu-pilot Mega (APM ver.2.6) is the Flight Controller used in this project. It is a professional quality open-source auto-piloting firmware that is based on the Arduino Mega platform. This autopilot can also control fixed-wing aircraft, multi-rotor helicopters, as well as traditional helicopters.

P. R. Sriram, S. K. Ramani, R. V. Shrivatsav, M. M.Mankiandan and N. Ayyappaa, "Autonomous Drone for Defence Machinery Maintenance and Surveillance," 2019 Third World Conference on Smart Trends in Systems Security and Sustainablity (WorldS4), London, UK, 2019

This proposed research work focuses on the implementation of an autonomous unmanned aerial vehicle (UAV) which is controlled using a pix hawk flight controller. The Quad Copter can navigate autonomously without any real-time input from the user and is programmed to follow a specified path autonomously.

S. O. Murphy, C. Sreenan and K. N. Brown, "Autonomous Unmanned Aerial Vehicle for Search and Rescue Using Software Defined Radio," 2019 IEEE 89th Vehicular Technology Conference (VTC2019-Spring), Kuala Lumpur, Malaysia, 2019

To find missing people in a remote area, we propose an autonomous unmanned aerial vehicle (UAV) approach which attempts to locate the target by detecting and localizing the radio signals produced by a GSM cell phone.

D. Sarkar et al., "Development of an Autonomous UAV Integrated with a Manipulator and a Soft Gripper," 2022 13th Asian Control Conference (ASCC), Jeju, Korea, Republic of, 2022

This paper is devoted to presenting the design and development of a quad-rotor UAV, a two DOF manipulator and a pneumatically actuated lightweight three finger soft gripper and the overall integration of the drone manipulator system. This integration was intended to deliver small packages of medicines and food with payloads of up to 500 grams from one place to another.

T. C. Mallick, M. A. I. Bhuyan and M. S. Munna, "Design & implementation of an UAV (Drone) with flight data record," 2016 International Conference on Innovations in Science, Engineering and Technology (ICISET), Dhaka, Bangladesh, 2016

This paper proposed the development of an autonomous unmanned aerial vehicle (UAV) which is controlled by wireless technology through graphical user interface (GUI). This proposed design can fly autonomously and capable of tracking pre-loaded mission automatically.

IV.METHODOLOGIES

A quadcopter's basic structure consists of a central hub and four evenly spaced rotor assembly. The thrust produced by each of these rotors is perpendicular to the vehicle since they are all positioned in the same plane and within the same plane, respectively. Each rotor will create the same amount of thrust when given a particular power input, assuming the rotors are built using identical components with comparable specifications and expected performance.

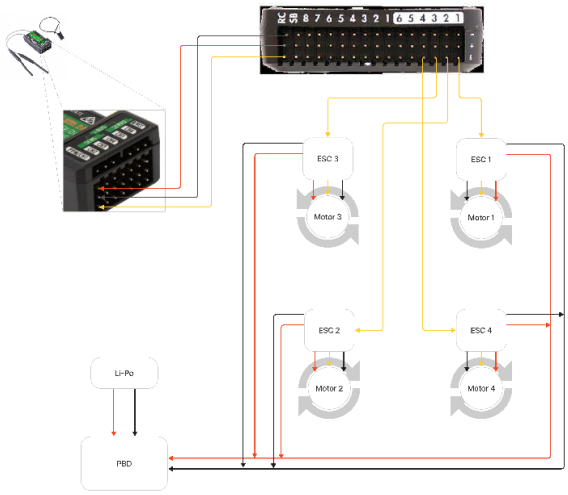

Figure 1:Pixhawk connection to motor and their directions

SOFTWARE ARCHITECTURE OF THE PROPOSED PLATFORM

Mission Planner software is used to manage the drone's movements. By using this software, we can assign waypoints and actions to the drone. To control the rotation speed of the propellers, the Pix-hawk flight-controller transmits control signals to the electronic speed controller. All captured images are transferred to the AWS cloud once they reach the base station. These images are processed in the cloud by a pre-trained Yolov3 deep learning model that detects human and object motion. Military personnel are alerted immediately if human emotions are detected, as well as the corresponding GPS coordinates. With the drone Xbee module, you can implement software updates for the drone as well as surveillance. It allows the drone to receive, and store updated software code transmitted by the Xbee module. The updated code is then executed accordingly. Continuous monitoring of the drone's stability is conducted, and any deviations from the desired state prompt the execution of corrective measures to restore stability. Throughout this process, several software tools are utilized to support these operations.

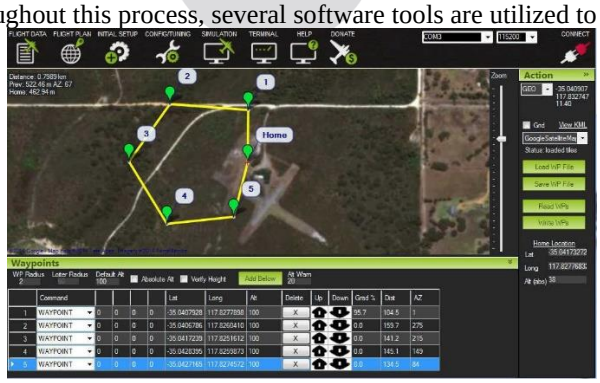

Figure 2:Mission Planner Interface for setting the area to fly

Autopilot

UAV autopilot systems allow an unmanned aerial vehicle, such as a drone, to perform entire missions autonomously without the need for manual remote control. These missions may include cargo delivery, mapping, surveillance and many other applications.

Open CV

OpenCV is a great tool for image processing and performing computer vision tasks. It is an open-source library that can be used to perform tasks 31 like face detection, objection tracking, landmark detection, and much more. It supports multiple languages including python, java C++.

Raspbian

Raspbian is a free operating system based on Debian optimized for the Raspberry Pi hardware. Raspbian comes with over 35,000 packages, pre-complied software bundled in a nice format for easy installation on Raspberry Pi computer.

Mission Planner

Mission Planner is a full-featured ground station application for the ArduPilot open-source autopilot project. Mission Planner is a ground control station for Plane, Copter and Rover. It is compatible with Windows only. Mission Planner can be used as a configuration utility or as a dynamic control supplement for your autonomous vehicle.

HARDWARE ARCHITECHTURE OF THE PROPOSED PLATFORM

The flight controller and the onboard computer are the two main parts of the system. The UAV's motions are carried out by the flight controller in accordance with the received control signal. For precise placement, it is directly connected to several sensors, including GPS. The primary processing component of the entire system is the onboard computer. Its duties include maintaining and processing sensor data, performing analysis, and producing the proper control signals for the flight controller. We created artificial algorithms and designed the drone's body in line with dynamics to achieve autonomy and the required behavior. The hardware system consists of several sensors, an effective controller, and electronic devices. To enable desired movements, the controller collects information from a variety of sensors. Information is provided on orientation, acceleration and angular rate specifically through a 3-axis accelerometer and 3-axis gyroscope.

Figure 3:Frame on which all the components will be assembled

PixHawk

Our autonomous quad-copter drone is controlled using PixHawk flight controller which is powered using Lithium Polymer 2200mAh battery. It is the main controller a it will do all the computing process of the drone. The PixHawk board is a hardware design that can be used for autonomous flight to perform navigation-related tasks such as surveillance and data acquisition. PX4 autopilot is an open-source autopilot system oriented toward inexpensive autonomous aircraft. Low cost and availability enable hobbyist use in small remotely piloted aircraft.

BLDC Brushless DC Motor

BLDC motor works on the principle similar to that of a Brushed DC motor. The Lorentz force law which states that whenever a current carrying conductor placed in a magnetic field it experiences a force. As a consequence of reaction force, the magnet will experience an equal and opposite force.

Li-Po Battery

Drone battery and energy sources are mainly used to provide power to the relevant system in an unmanned aerial vehicle (UAV). Several drone power sources are currently available in the market, such as batteries.

Raspberry Pi

The Raspberry Pi is a single board computer developed by the Raspberry Pi foundation in the UK. The Pi does not work out of the box. It lacks a hard drive and it does not come with a preinstalled operating system. To install an OS microSD card prepared

with an OS image is needed. And because the software that runs on the mirror is coded on the same device at least a screen, a keyboard and a mouse are required.

GPS Module

To navigate the distance with a drone then this GPS Module is needed. GPS drones are equipped with a GPS module that allows them to know their location relative to a network of orbiting satellites. Connecting to signals from these satellites allows the drone to perform functions such as position hold, autonomous flight, return to home, and waypoint navigation.

Electronic Speed Controller

Electronic speed controllers (ESCs) are devices that allow drone flight controllers to control and adjust the speed of the aircraft's electric motors. A signal from the flight controller causes the ESC to raise or lower the voltage to the motor as required, thus changing the speed of the propeller.

Figure 4:Complete connections of all the components

V.CONCLUSION

This project involved creating a drone that could operate independently of human control. When necessary, it is adaptable enough to transition to manual control. A mid-winged drone with a wingspan somewhat larger than the fuselage length was selected for this project. A drone with improved lift capabilities and the capacity to hover in midair was a possibility. However, an airplane design was finally chosen to simplify programming and lower expenses associated with programming drone stability for a variety of variables.

REFERENCES

1. P. Smyczynski, L. Starzec, and G. Granosik, "Autonomous drone control system for object tracking: Flexible system design with implementation example," in 2017 22nd International Conference on Methods and Models in Automation and Robotics (MMAR), 2017, pp. 734–738.
2. H. X. Pham, H. M. La, D. Feil-Seifer, and L. Van Nguyen, "Reinforcement learning for autonomous UAV navigation using function approximation," in 2018 IEEE International Symposium on Safety, Security, and Rescue Robotics (SSRR), 2018, pp. 1–6.
3. U. O. Matthew, J. S. Kazaure, A. Onyebuchi, O. O. Daniel, I. H. Muhammed, and N. U. Okafor, "Artificial intelligence autonomous unmanned aerial vehicle (UAV) system for remote sensing in security surveillance," in 2020 IEEE 2nd International Conference on Cyberspace (CYBER NIGERIA), 2021, pp. 1–10.
4. P. R. Sriram, S. K. Ramani, R. V. Shrivatsav, M. M.Mankiandan, and N. Ayyappaa, "Autonomous drone for defence machinery maintenance and surveillance," in 2019 Third World Conference on Smart Trends in Systems Security and Sustainablity (WorldS4), 2019, pp. 288–292.
5. T. C. Mallick, M. A. I. Bhuyan, and M. S. Munna, "Design & implementation of an UAV (Drone) with flight data record," in 2016 International Conference on Innovations in Science, Engineering and Technology (ICISET), 2016, pp. 1–6.
6. M. R. Haque, M. Muhammad, D. Swarnaker, and M. Arifuzzaman, "Autonomous quadcopter for product home delivery," in 2014 International Conference on Electrical Engineering and Information & Communication Technology, 2014, pp. 1–5.
7. Z. Zuo, C. Liu, Q.-L. Han, and J. Song, "Unmanned aerial vehicles: Control methods and future challenges," IEEE/CAA j. autom. sin., vol. 9, no. 4, pp. 601–614, 2022.
8. Y. Li, M. Li, A. Sanyal, Y. Wang, and Q. Qiu, "Autonomous UAV with learned trajectory generation and control," in 2019 IEEE International Workshop on Signal Processing Systems (SiPS), 2019, pp. 115–120.
9. R. B. Grando et al., "Visual-based autonomous unmanned aerial vehicle for inspection in indoor environments," in 2020 Latin American Robotics Symposium (LARS), 2020 Brazilian Symposium on Robotics (SBR) and 2020 Workshop on Robotics in Education (WRE), 2020, pp. 1–6.