Electric Vehicle Charger

[1]Sameer Sakhare, [2]Varun Raj Sinha, [3]Aayush Patil, [4]Prof.Dr. D.E. Upasani

[1,2,3]Student, [4]Professor
[1]Electronics and Communication Engineering
[1]School of Engineering and Science, MIT ADT University, Pune,India

Abstract: This research paper presents a project aimed at developing a electric vehicle charger with output of 3 Kw. Electric vehicles are a relatively recent technology that is seeking for its place in the market. It has several advantages, such as the reduced greenhouse emissions, fuel savings and its ease of use. The objective of this paper is to present the design and simulation of unidirectional onboard charger that can charge the traction battery through the single phase AC power grid. Here, the OBC consists of an AC-DC converter and Buck type DC-DC converter to regulate the charging voltage and charging Current of the battery. Electric vehicles are a new and upcoming technology in the transportation and power sector that have many benefits in terms of economic and environmental. This study presents a comprehensive review and evaluation of various types of electric vehicles and its associated equipment in particular battery charger and charging station. A comparison is made on the commercial and prototype electric vehicles in terms of electric range, battery size, charger power and charging time.

Index Terms: Electric Vehicle, Charging Station

I. INTRODUCTION

The demand for Electric Vehicle (EV) is increasing because of its reduction in fuel usage and greenhouse gas emissions. EVs need a significant amount of energy storage systems for their continuous propulsion. The battery chargers play a vital role in the development of EVs, as the vehicle needs frequent charging. The charging station helps reduce on-board energy storage requirements and costs . EVs have not yet gained full acceptance as the cost of batteries is high, and the life of the cells is low ; at the same time, there is a lack of charging infrastructure. Another drawback is that the battery chargers can induce harmonics into the electric utility systems . The Electric vehicle requires a battery bank that can be charged from the conventional or non-conventional sources. Mostly in the case of non-conventional source, the solar PV is widely used for electric vehicle charging because of reduced emission and pollution, which is more prominent in fuel cells .

II. OBJECTIVE

- Development of Type 3 EV charging station for fast charging in Electric Vehicles.
- So it can charge the Electric Vehicles faster than on-board charger.
- Make Safety Sensors or making of protection circuit so that it will not harm to the system as well as the vehicle and the person who is standing there.

III. LITERATURE REVIEW

Design and Simulation of Low Power Charging Station for Electric Vehicle Fr.C. Rodrigues Institute of Technology 16 March 2020.

The objective of this paper is to present the design and simulation of unidirectional onboard charger that can charge the traction battery through the single phase AC power grid.

Different fast charging methods and topologies for EV charging ERDA Vadodara, India 14 June 2018.

This paper presents different fast charging schemes along with different power converter topologies for electric vehicles. Simulation results of different topologies of power converter are presented and compared.

Case study on infrastructure of EV charging station M.M Polytechnic, Thergaon Pune, India April 2020 .

This report discusses about the potential need for electric vehicles (EV), charging station (CS) infrastructure and its challenges for the Indian scenario. With increase in liberalization, privatization and expansion of distributed and renewable power generation of Indian electricity market, transmission and distribution, as well as market processes related to the allocation of energy and energy mix are undergoing an evolutionary development with improved efficiency and reliability

EV Charging Stations and Modes: International Standards , University of Rome Sapienza Rome, Italy 2014.

The work includes also a summary on possible types of Energy Storage Systems (ESSs), that are important for the integration of EVs fast charging stations of the last generation in smart grids. Finally a brief analysis on the possible electrical layout for the ESS integration in EVs charging system, proposed in literature, is reported.

Low Cost Charging Station for Electric Vehicle: Design and Prototyping Sebelas Maret University Surakarta, Indonesia November 2019 .

This research proposes the design and prototyping of low-cost charger station. The charging station equipped with keypad to input how much power that will be purchased and an LCD to monitor the status. This station can be used to charge both electric car and electric motorcycle/ bicycle. Prototype has been built and tested to charge Plug-in Hybrid Electric Vehicle (PHEV) car both for normal charging and fast charging with satisfactory results.

Electric Vehicles Charging Management in Communication Controlled Fast Charging Stations CERTH-ITI, Greece 09 February 2015 .

The proposed model considers a charging station network that provides service to multiple EV charging-classes. The basic feature of the proposed model is when EVs are blocked by their preferred station due to the unavailability of charging outlets,

they are prompted via a communication system to select their next station, which either provides fixed or elastic charging services.

Development of Electric Vehicle Charging Station Management Systemin Urban Areas NLECT Banten, Indonesia 10 November 2020.

This Paper provision of charging station (CS) infrastructure for electric vehicle (EV) is essential to ensure flexibility. Managing the EV Charging Station is challenged due to communicating several brands into the central system. We successfully developed the charging station management system (CSMS). Application development is used to make a tool in the form of a CSMS application to monitor and control CS with the name SONIK (electric vehicle charging operation system).

A Comparison of Electric Vehicle Level 1 and Level 2 Charging Efficiency VEIC 128 Lakes id Ave., Burlington 23 February 2015.

In this study we examined the charging efficiency of Level 1 (120 Volt) and Level 2 (240 Volt) Electric Vehicle Supply Equipment (EVSE). Charging efficiency was defined as the percentage of power drawn from the electric grid that is actually taken up by the vehicle battery. We installed logging devices in 2 Nissan Leafs and 2 Chevrolet Volts in Vermont to track charging efficiency at each Level 1 and Level 2 charging event. Data was collected between June and November 2013 to provide a range of climatic conditions. Usable data was obtained from 115 charges and mean charging efficiency was found to be 85.7%. On average, Level 2 charging was 5.6% more efficient than Level 1 (89.4% vs. 83.8%). In those charges in which the battery took up less than 4 kWh, this difference in efficiency was even greater: 87.2% for Level 2 vs. 74.2% for Level 1. Efficiency gains of Level 2 charging also increased under low (<; 50°F) and high (> 70°F) temperatures.

IV.METHODOLOGIES

The basic block diagram of an Electric Vehicle (EV) charger typically consists of the following major components:

- Power Input: This block represents the connection to the power grid or an external power source. It could be a standard AC power supply, such as a residential or commercial electrical outlet, or a specialized power source for high-power charging stations.
- Power Conversion: The power conversion block converts the AC power from the input into the DC power required for charging the EV's battery. It typically includes components such as rectifiers, transformers, and power electronics (e.g., inverters or converters) to achieve the necessary voltage and current levels.
- Charging Control: This block is responsible for managing the charging process and ensuring the proper control and safety measures. It includes microcontrollers or digital signal processors (DSPs) that control the charging parameters, such as charging current, voltage, and charging mode (e.g., fast charging or slow charging).
- Communication Interface: The communication interface block enables communication between the EV charger and the EV itself or other external systems. It can utilize various communication protocols, such as CAN (Controller Area Network), Ethernet, Wi-Fi, or cellular networks. This allows for features like remote monitoring, data exchange, and control commands.
- Safety and Protection: Safety is a critical aspect of EV chargers. This block incorporates various safety features to protect both the charger and the EV. It includes components like ground fault protection, overcurrent protection, overvoltage protection, and temperature monitoring. These safety measures help prevent accidents, damage to equipment, and ensure the well-being of users.

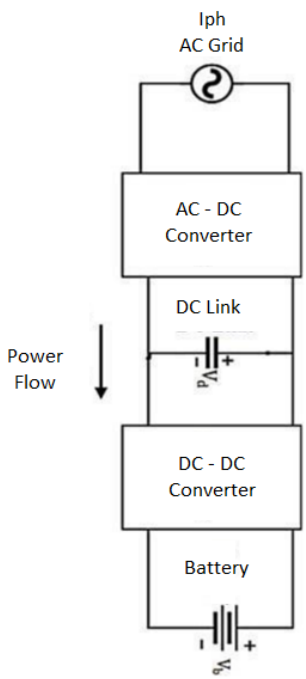

Figure 1: Basic Block Diagram of Electric Vehicle Charger

HARDWARE ARCHITECHTURE

The hardware architecture of the system consists of three main units Rectifier , DC to DC Converter , Protection Circuit.

1.1.1 Rectifier

It is a Electronic device that converts alternating current into direct current.it uses one or more than one number of P-N junction diodes .it behaves like one way so that current will flow only in one direction. There are two types of rectifies are there 1) Controlled Rectifier and 2) Uncontrolled Rectifiers.

1.1.2 Converter DC to DC

DC-DC converters convert HV to 48V, HV to 12V, and 48V to 12V in the various configurations of electric vehicles. The key design requirements for DC-DC converters are low losses, high efficiency, low volume and light weight. There are many architectures requiring different kinds of semiconductor devices. A buck converter (step-down converter) is a DC-to-DC power converter which steps down voltage (while stepping up current) from its input (supply) to its output (load) A boost converter (step-up converter) is a DC-to-DC power converter that steps up voltage (while stepping down current) from its input (supply) to its output (load).

1.1.3 Protection circuit

This circuit is use to prevent damage to expensive components and all the equipment wiring if a circuit should overload due to excessive current flow. Protection can be provided by:1) fuses 2) fusible links 3) circuit breakers 4)thermal limiters.

V.CONCLUSION

In conclusion, the development of a 3 Kw electric vehicle charger through the design and simulation of an onboard charger is a significant step towards promoting the use of electric vehicles. This technology presents several benefits, including reduced greenhouse emissions, fuel savings, and ease of use. The comparison between commercial and prototype electric vehicles in terms of electric range, battery size, charger power, and charging time reveals the potential for further innovation and development in this field. Overall, this paper highlights the importance of investing in research and development of electric vehicle technology to promote sustainable and clean transportation solutions.

REFERENCES

1. Bowman, M., Debray, S. K., and Peterson, L. L. 1993. Reasoning about naming systems. *ACM Trans. Program. Lang. Syst.* 15, 5 (Nov. 1993), 795-825. DOI= http://doi.acm.org/10.1145/161468.16147.
2. Ding, W. and Marchionini, G. 1997. *A Study on Video Browsing Strategies*. Technical Report. University of Maryland at College Park.
3. Fröhlich, B. and Plate, J. 2000. The cubic mouse: a new device for three-dimensional input. In *Proceedings of the SIGCHI Conference on Human Factors in Computing Systems* (The Hague, The Netherlands, April 01 - 06, 2000). CHI '00. ACM, New York, NY, 526-531. DOI= http://doi.acm.org/10.1145/332040.332491.
4. Tavel, P. 2007. *Modeling and Simulation Design*. AK Peters Ltd., Natick, MA.
5. Sannella, M. J. 1994. *Constraint Satisfaction and Debugging for Interactive User Interfaces*. Doctoral Thesis. UMI Order Number: UMI Order No. GAX95-09398., University of Washington.
6. Forman, G. 2003. An extensive empirical study of feature selection metrics for text classification. *J. Mach. Learn. Res.* 3 (Mar. 2003), 1289-1305.
7. Brown, L. D., Hua, H., and Gao, C. 2003. A widget framework for augmented interaction in SCAPE. In *Proceedings of the 16th Annual ACM Symposium on User Interface Software and Technology* (Vancouver, Canada, November 02 - 05, 2003). UIST '03. ACM, New York, NY, 1-10. DOI= http://doi.acm.org/10.1145/964696.964697.
8. Yu, Y. T. and Lau, M. F. 2006. A comparison of MC/DC, MUMCUT and several other coverage criteria for logical decisions. *J. Syst. Softw.* 79, 5 (May. 2006), 577-590. DOI= http://dx.doi.org/10.1016/j.jss.2005.05.030.
9. Spector, A. Z. 1989. Achieving application requirements. In *Distributed Systems*, S. Mullender, Ed. ACM Press Frontier Series. ACM, New York, NY, 19-33. DOI= http://doi.acm.org/10.1145/90417.90738.
10. Saurav Das, Khosru M. Salim, Dhiman Chowdhury, ―A Novel Variable Width PWM Switching Based Buck Converter to Control Power Factor Correction Phenomenon foran Efficacious Grid Integrated Electric Vehicle Battery Charger‖, IEEE Region 10 Conference, TENCON 201.
11. Jung-Hyo Lee, Jung-Song Moon, Yong-Seok Lee, ―Fast Charging Technique for EV Battery Charger using three phase AC-DC Boost 47 Converter,‖ IECON 2011 - 37th Annual Conference on IEEE Industrial Electronics Society.